August 30, 2001

Addressees

Subject: Infrastructure Technical Review Committee Report

Portions of the Northwest transmission system are approaching gridlock. An adequate and affordable electric supply is not possible without sufficient transmission capacity. An unreliable system puts public health, safety and the economy at risk.

As the operator of three-quarters of the bulk transmission in the Northwest, the Bonneville Power Administration (BPA) developed a transmission infrastructure proposal that builds upon BPA's previous transmission expansion plans. Undertaking a capital program of this magnitude will require an increase in BPA's borrowing authority. A diverse group of Northwest electric power interests, in an August 8, 2001 letter to Vice President Cheney, strongly endorsed increased borrowing authority in order to ensure that sufficient financial resources are available to accomplish transmission expansion needed to ensure an adequate and affordable electricity system for the Northwest.

To ensure that BPA's proposal designs and prioritizes improvement projects in a manner that will provide the most cost-effective, reliable service for the region's consumers, a technical and economic review committee was formed. The committee drew on individuals who are also members of the Northwest Power Pool (NWPP) Transmission Planning Committee (TPC), Operating Committee (OC) and the Northwest Regional Transmission Association ("NRTA") Planning Committee ("PC"). The committee was asked to report its recommendations by August 30, 2001 to enable BPA to install necessary system facilities as soon as possible. A critical first step is securing additional borrowing authority for BPA.

Attached is a report on the transmission infrastructure proposal that contains the conclusions and recommendations of the review committee. This is the first annual report on BPA's major transmission investments.

Ken Morris
PacifiCorp

John Martinsen
Snohomish PUD

Wayman Robinett
Puget Sound Energy

Hardev Jui
Seattle City Light

Scott Waples
AvistaCorp

Ronald Schellberg
Idaho Power Company

John Leland
Montana Power Company

Jim Eden
PGE Company

cc
Infrastructure Technical Review Committee

Upgrading the Capacity and Reliability of the BPA Transmission System

Report of the Infrastructure Technical Review Committee

August 30, 2001

Table of Contents

1) **Executive Summary** **3**

2) **Purpose and Terms of Engagement for the Committee** **5**

3) **System Need** **6**

4) Phase 1 – G9 Projects **9**

5) **Glossary of Terms** **10**

6) **References** **10**

Appendices

A. **Review Group Participants** **A-1**

B. **System Maps** **B-1**

C. **Master Schedule** **C-1**

D. **Project Summary Sheets** **D-1**

E. **Risk and Uncertainty** **E-1**

F. **Business Case Information** **F-1**

G. **Right of Way Separation** **G-1**

H. **Canadian Treaty Entitlement Information** **H-1**

I. **Phase 2 and 3 Infrastructure Additions** **I-1**

J. **Letters of Support** **J-1**

1. Executive Summary

Portions of the Northwest transmission system are approaching gridlock. An adequate and affordable electric supply is not possible without sufficient transmission capacity. An unreliable system puts public health, safety and the economy at risk. Problems with the transmission in the region are manifested in several ways:

* Chronic congestion existing on a number of transmission paths requires curtailment of both firm power deliveries and economy energy.
* Resolution of the Western energy crisis requires development of new generating resources. The vast majority of proposed Northwest resources cannot obtain firm transmission service, or be integrated, without additional bulk transmission.
* While power loads have been growing steadily at 1.8% annually and the use of the transmission system is up by over 2% annually, few bulk grid transmission lines were added in the past 15 years.
* It will take much longer to site and build transmission to deliver needed new generation than it will take to build and site the generation. New transmission is needed to meet existing and future obligations in order to comply with recently adopted national and regional standards that ensure a reliable power system.
* It is extremely difficult to meet obligations when facilities are removed from service to conduct normal maintenance or to construct new facilities.

As the operator of three-quarters of the bulk transmission in the Northwest, the Bonneville Power Administration (BPA) developed a transmission infrastructure proposal that builds upon BPA's previous transmission expansion plans. Undertaking a capital program of this magnitude will require an increase in BPA's borrowing authority. A diverse group of Northwest electric power interests, in an August 8, 2001 letter to Vice President Cheney, strongly endorsed increased borrowing authority in order to ensure that sufficient financial resources are available to accomplish transmission expansion needed to ensure an adequate and affordable electricity system for the Northwest.

To ensure that BPA's proposal designs and prioritizes improvement projects in a manner that will provide the most cost-effective, reliable service for the region's consumers, a technical and economic review committee was formed. The committee drew on individuals who are also members of the Northwest Power Pool (NWPP) Transmission Planning Committee (TPC), Operating Committee (OC) and the Northwest Regional Transmission Association ("NRTA") Planning Committee ("PC"). The committee was asked to report its recommendations by August 30, 2001 to enable BPA to install necessary system facilities as soon as possible. A critical first step is securing additional borrowing authority for BPA.

This review is intended to be the first in an annual process to coincide with BPA's annual budget cycle. It covers the nine projects in Phase 1 of BPA's infrastructure proposal. Review of additional projects will be conducted in subsequent years. There are several

additional parallel efforts that provide for review of proposed transmission additions. This committee's analysis and recommendations will be shared and further analyzed in the following forums.

* Northwest Power Pool (NWPP) Transmission Planning Committee
* Northwest Regional Transmission Association (NRTA) Planning Committee
* Western Systems Coordinating Council (WSCC) Regional Planning Group
* National Environmental Protection Agency (NEPA) review for individual projects

In addition, the Western Governors Association (WGA) has completed *Conceptual Plans for Electricity Transmission in the West*. The WGA study looks at the transmission required for two resource scenarios over a period of ten years. It did not examine transmission facilities assumed to be in place by 2004, which encompasses much of Phase 1 of the infrastructure proposal.

During August, the committee met to review the infrastructure proposal developed by BPA. While some of the proposals have been under development in previous forums with outside participation, other proposals were presented for the first time and had only limited opportunity for review. The committee has reached the following conclusions and recommendations based on its review:

* There is a compelling and immediate need to upgrade portions of the Northwest bulk transmission grid. Solutions proposed by BPA in coordination with others address the identified problems. The first nine projects are high priority and should complete the detailed planning and development process as soon as possible. Projects 10, 11 and 12, which were not part of the scope of work, are also necessary for load service reliability.
* BPA borrowing authority for *transmission* should be increased by at least $1 billion in order to ensure that sufficient financial resources are available to accomplish transmission expansion over a ten-year planning horizon.
* Preliminary analysis has shown that increased transmission use will recover the cost of the proposed capital additions. BPA should secure 10 to 20 year firm transmission service contracts before proceeding with construction. (Note: BPA's transmission investments are repaid by its transmission customers, not taxpayers.)
* Additional reinforcements by BPA and others are needed to maximize reliability and transfer capability from the proposals. Other Northwest utilities have planned transmission additions, and maximum benefits will be achieved through coordinated development.
* Future reviews should be conducted annually to ensure that BPA designs and prioritizes major transmission projects in a manner that will provide the most cost-effective, reliable service for the region's consumers.

2. Purpose and Terms of Engagement for the Review Committee

In order to ensure that BPA's proposal designs and prioritizes transmission projects in a manner that will provide the most cost-effective, reliable service for the region's consumers, a technical and economic review committee was formed. The committee drew on individuals who are also members of the Northwest Power Pool (NWPP) Transmission Planning Committee (TPC), Operating Committee (OC) and the Northwest Regional Transmission Association ("NRTA") Planning Committee ("PC"). The committee was asked to report its recommendations by August 30, 2001 to enable BPA to implement system upgrades that can be put in place as soon as possible. A critical first step is securing additional borrowing authority for BPA.
Below are the terms of engagement:

* An independent technical and economic review committee ("committee") will be formed, consisting of representatives of BPA's transmission customers and BPA. Committee members shall have business and technical expertise in transmission planning and operational issues. BPA and its transmission customers agree to work together in good faith to determine a mutually agreed upon committee roster in a timely fashion.
* The initial annual review will occur during August, 2001, for the purpose of reviewing proposed BPA transmission investments over $10M for the next five years (2002 – 2006). Each year, the committee will review proposed transmission investment decisions for the succeeding five-year period.
* The committee will evaluate proposed transmission projects based on whether they would provide appropriate business, technical, and cost-effective solutions to identified problems, based on a "single utility" planning concept. The scope of review will include load center reliability, congestion relief, generation integration, meeting contract commitments, and schedules for project completion. The committee's scope of work is limited to transmission issues, and does not include transmission facility siting.
* The committee will work to assure that the proposed transmission investment program prioritizes BPA's transmission improvement projects in a manner that will provide the most cost-effective, reliable service for the region's consumers.
* The committee will produce an annual report describing the committee's work and whether it finds that BPA is designing and prioritizing its transmission improvement projects in a manner that will provide the most cost-effective, reliable service for the region's consumers. The goal will be a report that enjoys the unanimous support of the committee. Failing agreement, a majority vote will determine the content. Each committee member shall have one vote. BPA will be an ex-officio member of the committee.
* BPA or participating utilities are not legally obligated to abide by any recommendations made by the committee.

After completing the first review, the committee recommends that BPA expand its engineering, economic and risk analysis of all alternatives (transmission and non-transmission) and develop a more transparent decision framework. In addition, any changes to the recommended plans of service should be communicated to the committee.

3. System Need

Portions of the Northwest transmission system are approaching gridlock. Problems are manifested in several ways, as discussed below. Appendix D addresses specific problems as part of each proposed project.

Chronic congestion exists on several critical transmission paths (Figure 1), requiring curtailment of both firm power deliveries and economy energy. For example, on the West of Hatwai transmission path in Eastern Washington state, approximately 700 megawatts (MW) of scheduled power transfers were cut on May 22, 2001. Use of the system by firm contract holders has frequently been restricted since May. Existing remedial action schemes (RAS) have been extended to drop coal plants and additional hydro units for single contingencies. Curtailments have led to litigation by transmission customers.

On another critical path, North of John Day, there are firm transmission service requests for this year that exceed transfer capability by 1700 MW. By 2004, the deficit grows to over 5000 MW. These constraints limit wholesale power trade, raising prices for all consumers in the West.

As recognized in the National Energy Policy report submitted by Vice President Cheney on May 16, 2001, resolution of the Western energy crisis requires development of new generation resources. About 1000 MW of generation currently under construction have contracted for wheeling (transferring power) over the BPA system. An additional 3000 MW of new generation is proposed to be online by 2004, and developers for nearly 30,000 MW of generation have requested interconnection. While many of these plants will not be built, regional studies identified a shortfall of about 3000 MW by 2004 (based on regional load and generation resource forecasts). Most proposed new generation resources cannot obtain firm transmission service, or be integrated into the regional power system, without additional transmission investment.

While loads have been growing steadily at 1.8% annually, few bulk transmission lines were added in the past 15 years (Figure 2). Since that time BPA has kept up with increasing transmission demands through controls and other non-wire solutions, but the system is beyond its limits for these fixes. It now shows signs of stress to the point where system security must be carefully monitored.

Existing and future obligations can not be fully met while yet complying with recently adopted national and regional reliability standards. Stringent requirements since the Western system disturbances in the summer of 1996 continue to remove capacity from

the system that we had depended on. There is little margin left to protect against unforeseen events, increasing the risk of cascading outages. It is extremely difficult to meet obligations when facilities are removed from service to conduct normal maintenance or to construct new facilities.

We have squeezed the available margin and implemented what are called "non-wires" alternatives for increasing the power transfer capability of the system as far as is technically prudent. Without investment in transmission, adequate and affordable electric supply is not possible. This puts public health, safety and the economy at risk. A Regional Transmission Organization (RTO) will begin operation in 2004, at the earliest. The region cannot wait for the RTO to address these problems given that major projects require three to five years to complete.

4. Phase 1 – G9 Projects

G9 Project List

Project		Cost (loaded) ($M)	Energization Date	Capacity Added MW
Kangley - Echo Lake 500 kV line	G1	45	Fall 2002	600
Schultz - Black Rock 500 kV line	G2	107	Fall 2004	600
McNary - John Day 500 kV line	G3	117	Fall 2004	1200
Lo Monumental - Starbuck 500 kV line	G4	27	Fall 2004	1200
Smiths Harbor - McNary 500 kV line	G5	38	Fall 2004	1300
Schultz series capacitors	G6	25	Fall 2003	300
Celilo Modernization	G7	50	Fall 2003	-
Monroe - Echo Lake 500 kV line	G8	90	Fall 2005	600
Bell - Coulee 500 kV line	G9	116	Fall 2004	800
Total		615		

Project Drivers

	Load Service	Entitlement Return	Generation Integration	Transfers	Reliability	O&M Savings	BiOp
G1	x	x			x		
G2				x	x		x
G3			x		x		
G4			x		x		
G5			x		x		
G6	x	x			x		
G7				x	x	x	
G8	x	x	x		x		
G9				x	x		x

The nine projects grouped together in Phase 1 of the infrastructure proposal were selected for their contribution toward maintaining reliable service to loads, integrating new generation, and restoring or enhancing transfer capability across key paths (see Appendix D). While all are considered high priority, they are sequenced based on the immediacy and severity of the reliability problem and/or the proposed startup dates for new generation. The energization dates are tempered by expected construction schedules and could change.

Other projects where the need was not as immediate were placed into Phases 2 and 3 of the infrastructure proposal (see Appendix I). Project G-10 is also critical, but is already underway. Projects G-11 and G-12 are also viewed as important for reliability, although the need is somewhat later. Projects in Phases 2 and 3 will be reviewed next year.

5. Glossary of Acronyms and Terms

MW	A unit of power. One MW would serve approximately 700 homes.
NRTA	Northwest Regional Transmission Association
NWPP	Northwest Power Pool
RTO	Regional Transmission Organization
WSCC	Western Systems Coordinating Council

Bulk Transmission – Transmission lines that serve as the backbone of the grid, typically operated at voltages of 230-kV and above.
Cut Plane – The boundary of an imaginary line passing through a group of transmission lines used as a frame of reference for monitoring flow across the lines.
Reliability Criteria – Reliability standards by which acceptable performance is measured.
Remedial Action Scheme – A control system used to take mitigating action such as generator tripping in the event of outage of one or more transmission elements
Series Compensation – The use of a network device connected in series with a transmission line used to increase or decrease flow on the line.
Stability – The condition of a power system returning to a balanced condition following a disturbance.

6. References

[1] NERC/WSCC Planning Standards, Board of Trustees approved 8/01

[2] Biological Opinion, Endangered Species Act.

Appendix A – Participants

[blank page]

Infrastructure Technical Review Committee Participants

Name		With	Phone	E-Mail	Note
Bayless	Rich	PACW	503-813-5739	rich.bayless@pacificorp.com	
Eden	Jim	PGE	503-464-7031	jim_eden@pgn.com	
Johnson	Don	PAC	503.813.5741	don.johnson@pacificorp.com	
Juj	Hardev	SCL	206-233-1551	hardev.juj@ci.seattle.wa.us	
Kinney	Scott	AVA	509.495.4494	skinney@avistacorp.com	
Leland	John	MPC	406.497.3383	jleland@mtpower.com	
Litchfield	Jim	Consultant	503 222-9480	lcg@europa.com	
Martinsen	John	SNOPUD	425.347.4327	jdmartinsen@snopud.com	
Morris	Ken	PAC	801.220.4277	ken.morris@pacificorp.com	
Reedy	Dana	NWPP	503.464.2806	dana.reedy@nwpp.org	
Robinett	Wayman	PSE	425.462.3144	wrobin@puget.com	
Rust	Jerry	NWPP	503-464-2807	jerry.rust@nwpp.org	
Ryan	Mike	PGE	503-464-8793	mike_ryan@pgn.com	
Schellberg	Ron	IPC	208-388-2455	rschellberg@idahopower.com	
Seabrook	Joe	PSE	425.462.3577	jseabr@puget.com	
Sidiropoulos	Mike	PAC		michael.sidiropoulos@pacificorp.com	
Waples	Scott	AVA	509.495.4462	scott.waples@avistacorp.com	

BPA Contacts					
Aggarwal	Ravi	BPAT	360.418.8601	raggarwal@bpa.gov	
Johnson	Fred	BPAT	360-418-2250	fmjohnson@bpa.gov	
Kohne	Kyle	BPAT	360.418.8633	krkohne@bpa.gov	
Kreipe	Mike	BPAT	360.418.8635	mjkreipe@bpa.gov	
Landauer	Marv	BPAT	360.418.8637	mlandauer@bpa.gov	
Litzenberger	Wayne	BPAT	503.230.4145	wlitzenberger@bpa.gov	
Matthews	Chuck	BPAT	360.418.8642	cmatthewes@bpa.gov	
Mittelstadt	Bill	BPAT	360.418.8647	wmittelstadt@bpa.gov	
Rodrigues	Melvin	BPAT	360.418.8815	mtrodrigues@bpa.gov	
Silverstein	Brian	BPAT	360.418.8678	blsilverstein@bpa.gov	
Stadler	Larry	BPAT	360.418.8822	lwstadler@bpa.gov	
Tesema	Berhanu	BPAT	360.418.8826	bktesema@bpa.gov	
VanZandt	Vickie	BPAT	360.418.8459	vrvanzandt@bpa.gov	

Appendix B – Facility Maps - See Separate Map File

[blank page]

Appendix C – Phase 1 Projects Schedule

[blank page]

Appendix C. Project Schedules

Project		Record of Decision	Energization
Kangley - Echo Lake 500 kV line	G1	Fall 2001	Fall 2002
Schultz - Black Rock 500 kV line	G2	Spring 2003	Fall 2004
McNary - John Day 500 kV line	G3	Fall 2002	Fall 2004
Lo Monumental - Starbuck 500 kV line	G4	Summer 2002	Fall 2004
Smiths Harbor - McNary 500 kV line	G5	Summer 2002	Fall 2004
Schultz series capacitors	G6	Spring 2002	Fall 2003
Celilo Modernization	G7	Spring 2002	Fall 2003
Monroe - Echo Lake 500 kV line	G8	Fall 2003	Fall 2005
Bell - Coulee 500 kV line	G9	Summer 2002	Fall 2004
Pearl Transformer	G10	Spring 2002	Fall 2004
South Seattle Transformer	G11	TBD	Fall 2005
Shelton Transformer and line addition	G12	Fall 2002	Fall 2005
Paul - Troutdale 500 kV line	G13	Spring 2003	Spring 2006
Hanford - Ostrander loop-in	G14	Spring 2004	Spring 2006
Libby - Bonners Ferry rebuild	G15	Summer 2003	Fall 2005
McNary tap to Ashe - Marion 500 kV line	G16	Fall 2003	Spring 2006
Little Goose - Starbuck 500 kV line	G17	Fall 2004	Fall 2006
Hatwai - Lolo 230 kV line	G18	Fall 2002	Spring 2005
McNary - Brownlee 230 kV line	G19	Fall 2003	Spring 2006
Libby - Bell 230 kV line	G20	Fall 2004	Fall 2006

Appendix D – G9 Project Summaries

[blank page]

1. Puget Sound Area Additions. (Kangley-Echo Lake 500-kV line, SnoKing 500/230-kV bank, etc.)

Background

This project is a critical part of the effort to serve load in the Puget Sound Area and to meet Canadian Entitlement Treaty obligations. The obligation to return the Canadian Entitlement increases from today's (August 2001) requirement of 768 MW to 1150 MW in April, 2003. The obligation beyond April 2006 is likely to fluctuate between 1100 MW and 1500 MW. See Appendix H.

This project will be coordinated with the addition of another 500/230-kV transformer bank (identified as G-11, South Seattle 500/230 Transformer Support) in the 2005-2006 time-frame and an additional 500 kV line identified as G-8 (Monroe – Echo Lake). Additional work will include upgrading 230 and 115 kV transmission by BPA and others to support load service and transfers with Canada. ..

Limiting Outages Addressed

* Raver-Echo Lake 500 kV line
* Existing 500/230 kV transformers at Monroe, Maple Valley, Tacoma & Covington

Benefit – Load Area Support and Interregional Transfers

This project will increase the system load carrying capacity and increase the south-to-north transfer capability in this portion of the Puget Sound area by approximately 600 MW. Without this project neither treaty obligations nor transmission agreements (load service) with Puget Sound area utilities will be met. The addition of the Monroe-Echo Lake 500-kV No.2 addresses capacity reinforcement north of Echo Lake (see item 8).

Business Case

The primary drivers of this project are load service and Canadian Entitlement return. The estimated time for cost recovery at current rates is between 10 and 16 years (Appendix F).

Risk

The date of need for the project could be delayed if Canadian Entitlement return was purchased within the US, or if additional generation were developed to serve Puget Sound area loads. The later circumstances, however, would increase the need for reinforcement of the I-5 corridor south of Seattle. These are considered to be unlikely.

Project Description

* Build approximately 9 miles of new 500-kV line from Echo Lake to a point on the Schultz-Raver 500 kV line (near the community of Kangley). This will create an Echo Lake – Schultz 500 kV line. The section between the tap point and Raver will operate normally
* Move the existing Monroe-Sammamish-SnoKing 230-kV tap to the Monroe-Echo Lake 500-kV line and add a new 500/230-kV transformer at SnoKing.
* Tap the Bothell-Sammamish 230-kV line into SnoKing.
* Remove the Horse Ranch tap from the Monroe-Snohomish 230-kV lines and re-terminate the Horse Ranch line directly to the Snohomish 230-kV bus.
* Reconfigure Bothell substation to add the 5th bus section.
* Future work will involve adding another transformer bank in the Puget Sound area in the 2005-2006 time frame. Possible locations are Covington or Maple Valley.

Alternatives Considered

* Addition of a 2nd Raver-Echo Lake 500 kV line.
* Conversion of Covington-Maple Valley 230 kV line to 500 kV.
* Same as proposed project but install a 500/230 kV bank at Covington or Maple Valley instead of SnoKing
* Covington – Berrydale 230 kV line

Energization Date: Fall 2002
Estimated Cost: $45 M

SNOHOMISH REGION

MIN TEMP -23.9°C (-11.0°F)
SEISMIC REQ. 0.50g

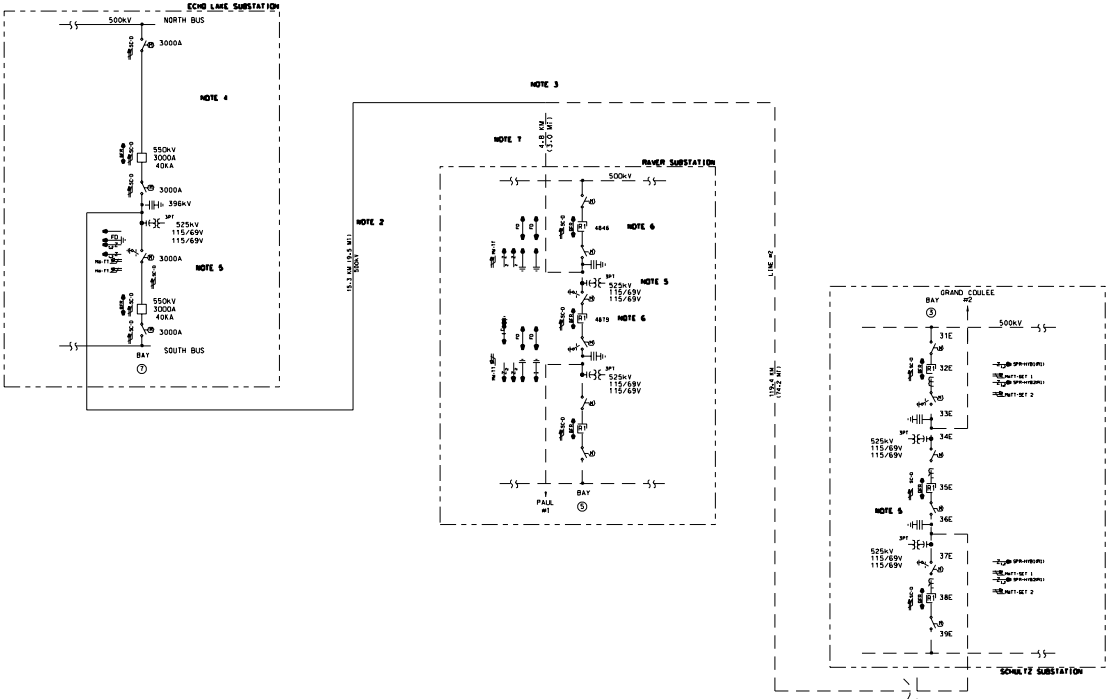

LEGEND

——— NEW/THIS PROJECT

— — — EXISTING

NO.	COMPUTER REVISION ONLY	REVISION DATE	APPROVED

PROJECT REQUIREMENTS DIAGRAM

UNITED STATES DEPARTMENT OF ENERGY
BONNEVILLE POWER ADMINISTRATION
HEADQUARTERS, PORTLAND, OREGON

PROPOSED DERIVATION DATE: 11/1/2002	OPERATIONS & PLANNING
PRELIMINARY APPROVED DATE	KANGLEY-ECHO LAKE TRANSMISSION PROJECT
PLANNING ENGR: L. W. S.	
FINAL APPROVED: M. J. K. DATE: 4/21/88	DRAWN: 257885 SCALE: TO SIZE: A1 SHEET: 1OF 2 REVISION: 0

[blank page]

2. North of Hanford Project (Schultz – Black Rock 500-kV line and Black Rock substation).

Background

This project relieves congestion on the North of Hanford (NOH) path (Vantage-Hanford 500-kV and Coulee-Hanford 500-kV lines) and along the I-5 corridor during spring and summer months when there are high north to south flows from Canada coupled with high Upper Columbia generation. Since the NOH and North of John Day (NJD) paths are in series, relieving congestion across the NOH path will allow the NJD path to be further utilized. This will facilitate greater use of the California Oregon Intertie (COI) by reducing schedule curtailments as well as helping integrate new generators in the northern part of the Northwest transmission system. The Schultz-Black Rock line will enable BPA to meet its Biological Opinion commitments for fish operation, and adds operational flexibility during low water years.

Limiting Outages Addressed

* Coulee-Hanford 500-kV line
* Vantage-Hanford 500-kV line
* Hanford-Ostrander 500-kV/Hanford-John Day 500-kV DLL

Benefit – Congestion Relief

This project will increase the transfer capability across the North of Hanford cut plane by approximately 600 MW and reduce or eliminate N-1 outage Remedial Action Scheme (RAS) requirements. The increased capacity will (1) reduce limitations on COI transfers, particularly at times of reduced lower Columbia generation due to fish spill, and (2) allow greater access of generation north of this cut plane to Idaho, Nevada, California and loads in the Northwest, and (3) reduce loading on the Raver-Paul 500-kV line by about 170 MW allowing approximately 340 MW of generation integration.

Business Case

The primary drivers of this project is North to South network transfers and provide additional capacity to integrate generation on the I-5 corridor. Also, BPA TBL made a commitment in the 2000 Biological Opinion to construct this project to provide future flexibility to accommodate potential spill increases on the Lower Columbia River. The estimated cost recovery of this project at current rates is 19 to 35+ years (Appendix F).

Risk

The date of need for the project would be delayed if the need for north to south transfers were reduced. However, BPA has received requests for transfers exceeding the capacity of this path. This is considered to be unlikely.

Project Description

* Build a new 500-kV line (approximately 62 miles) from Schultz substation near Ellensburg, WA to a new substation called Black Rock southwest of the Hanford area.
* Develop a new breaker and half substation called Black Rock, which will consist of 8 breakers. The Hanford-Ostrander 500-kV and Hanford-John Day 500-kV lines will be looped into Black Rock substation which will eliminate system problems caused by the loss of these lines.
* Re-terminate the Sickler-Schultz 500-kV into a new bay at Schultz substation to eliminate several 500-kV line crossing east of Schultz.

Alternatives Considered

* Schultz- Hanford 500 kV line
* Schultz – Ashe 500 kV line

Energization Date: **Fall 2004**
Estimated Cost: **$105-110 M**

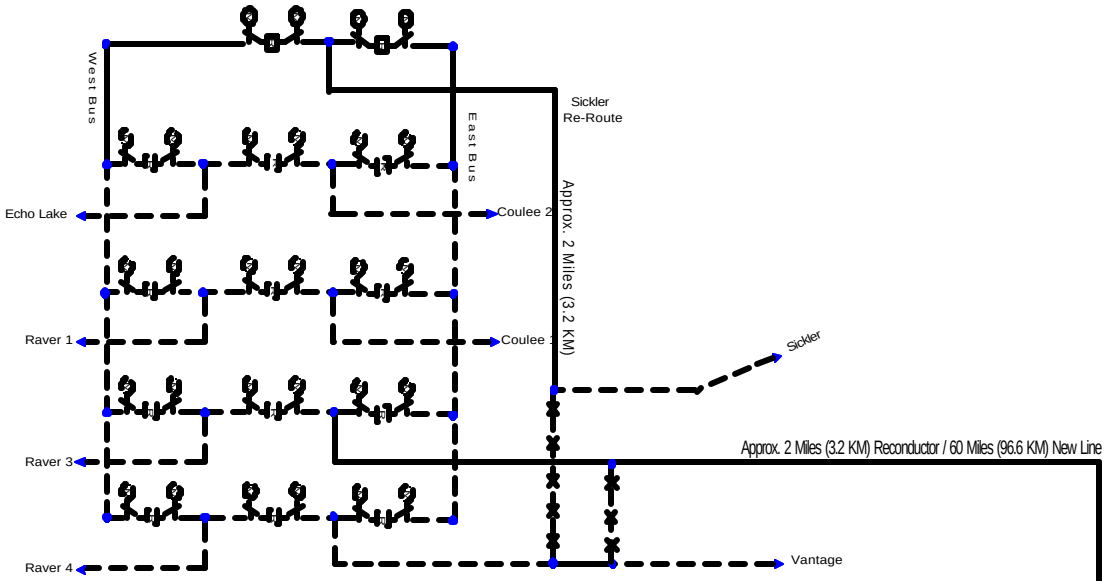

SCHULTZ

Approx. 2 Miles (3.2 KM) Reconductor / 60 Miles (96.6 KM) New Line

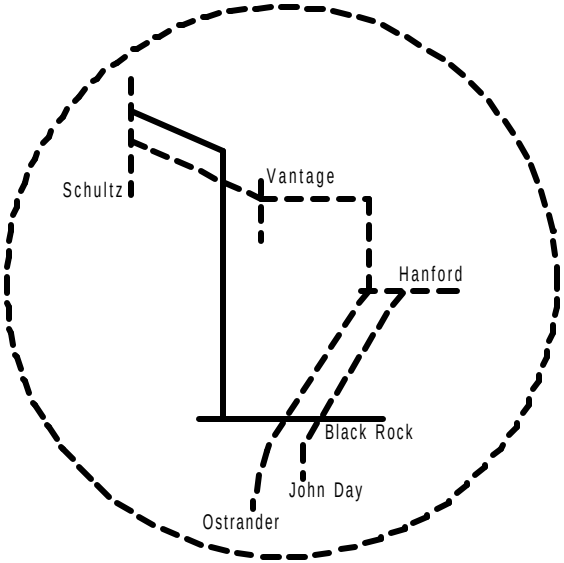

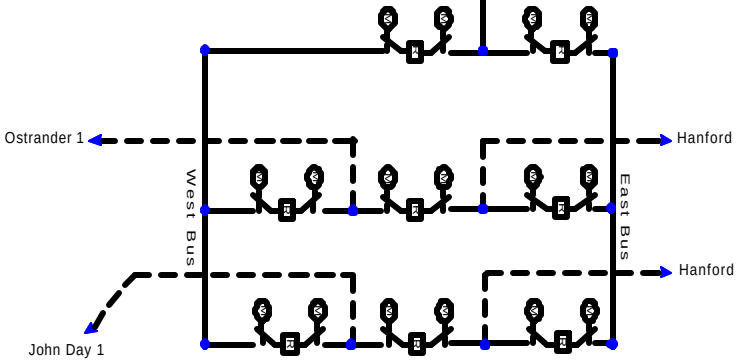

BLACKROCK

Legend:
Existing Equipment
Equipment, This Project
Equipment To Be Removed

PROJECT SKETCH
BONNEVILLE POWER ADMINISTRATION
New Blackrock 500-kV substation
New 500-kV line: Schultz - Blackro

[blank page]

3. West of McNary Project (McNary-John Day 500-kV line)

Background
This project is required to provide firm transmission service to new generator additions near the McNary and Lower Monumental area. The existing transfer capability across the West of McNary path is fully utilized with the addition of the Hermiston Power Project. Any new generation addition in the area requires a new transmission line to the west from McNary. There are several new generation projects proposed in this area. Addition of this new line would accommodate the integration of Starbuck (1200MW) and Wallula (1300 MW) generating plants. This would enable the delivery of much needed energy to westside load centers.

Limiting Outages Addressed
* Coyote Springs – Slatt 500-kV line
* McNary-Coyote Springs 500-kV
* Slatt-Buckley 500-kV line
* Slatt-John Day 500-kV line
* Ashe-Slatt-John Day 500-kV lines

Benefit - Generation Integration
This project will increase the transfer capability across the West of McNary and West of Slatt defined paths by approximately 1200 MW. Without this project it would not be possible to grant firm transmission service to any new generation addition in the area. This enables integration of 2500 MW of generation (G-4, G-5) based on system flow patterns and existing capacity.

Business Case

This Project along with the G-4 (Starbuck Generation) and G-5 (Lower Monumental and McNary Area Generation) will provide firm transmission for both Starbuck (1200 MW) and Wallula (1300 MW) generating projects. The primary use of this project is generation integration contracted for the next 20 years. The estimated cost recovery of this project at current rates is approximately 10 years (Appendix F).

Risk
The risk associated with this project is commercial failure of either generation project after it is completed. This is considered to be unlikely.

Project Description

* Build approximately 70 miles of 500-kV line from McNary 500-kV substation to John Day substation. The line will be routed through the north side of the Columbia River. This requires two river crossings, at McNary and John Day.
* Expand and configure McNary 500-kV substation from a ring bus to a breaker and half layout.
* Add breakers at John Day for the termination of the new line.

Alternatives Considered

* An option to build approximately 45 miles of 500 kV transmission line from McNary 500 kV substation to tap an existing Ashe - Marion 500 kV line was considered.

Energization Date: **Fall 2004**
Estimated Cost: **$115-120 M**

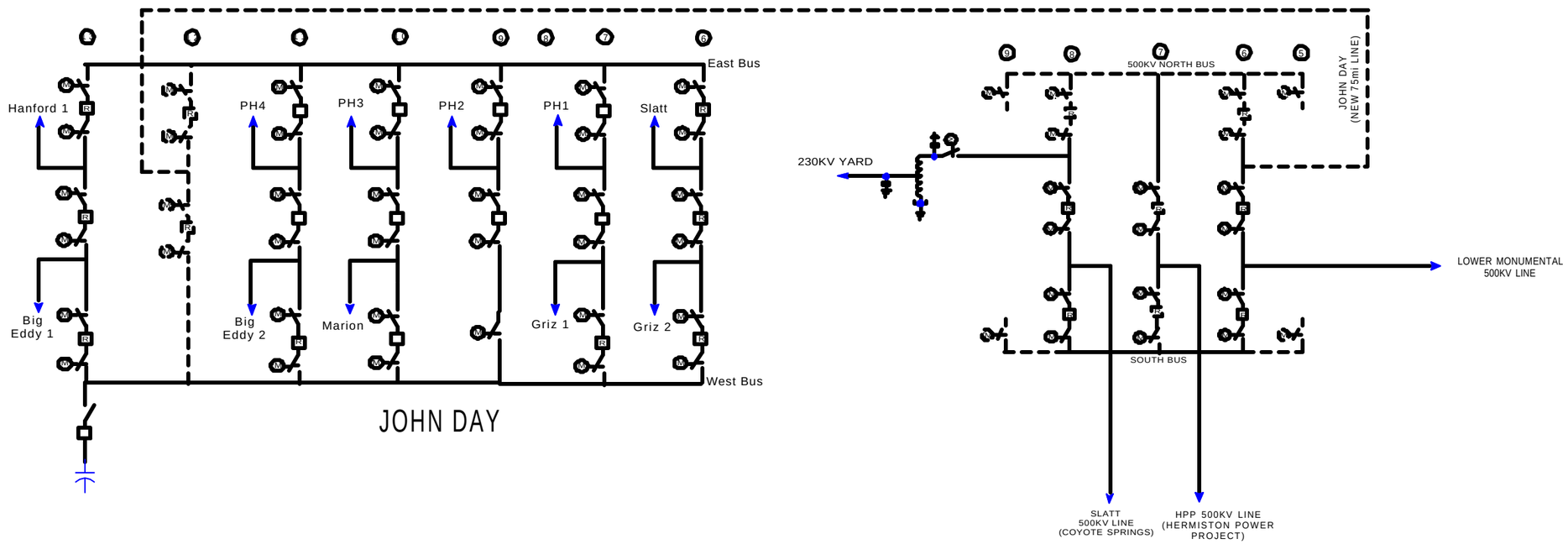

Legend:
Existing Equipment
Equipment, This Project

PROJECT SKETCH
BONNEVILLE POWER ADMINISTRATION
DESCRIPTION
MCNARY TO JOHN DAY
500-KV LINE

[blank page]

4. Starbuck Generation (Low Mon – Starbuck 500-kV line & Starbuck 500-kV Substation)

Background
This project is required to provide firm transmission service for 1200 MW of new generation proposed at Starbuck site, 15 miles east of Lower Monumental substation. This project need is contingent on the building of the Starbuck generation facility and switchyard.

Limiting Outages Addressed
* Starbuck-Little Goose #1 & Lower Monumental – Little Goose #2 500-kV DLL

Benefit – Generation Integration
This project will allow interconnection of 1200MW of generation at Starbuck.

Business Case

This Project will provide firm transmission for Starbuck (1200 MW) generation. The primary use of this project is generation integration contracted for the next 20 years The estimated cost recovery of this project at current rates is approximately 10 years (Appendix F)..

Risk
The risk associated with this project is commercial failure of either generation project after it is completed. This is considered to be unlikely.

Project Description
* Construct approximately 15 miles of new 500-kV line from the new Starbuck substation to Lower Monumental substation.
* At Lower Monumental 500-kV yard, add two circuit breakers, four motor operated disconnect switches, and support equipment to configure the yard to a full breaker and half layout.
* Develop a new Starbuck substation to integrate the generation through two powerhouse lines and loop in the existing Little Goose to Lower Monumental 500-kV No.1 line. The substation will be laid out as a full breaker and half with a total of 8 breakers.

Alternatives Considered
Build approximately 15 miles of 500 kV line radial to the Lower Monumental substation without connecting to the existing Lower Monumental – Little Goose #1 500 kV line.

Energization Date: Fall 2004
Estimated Cost: $25-30 M

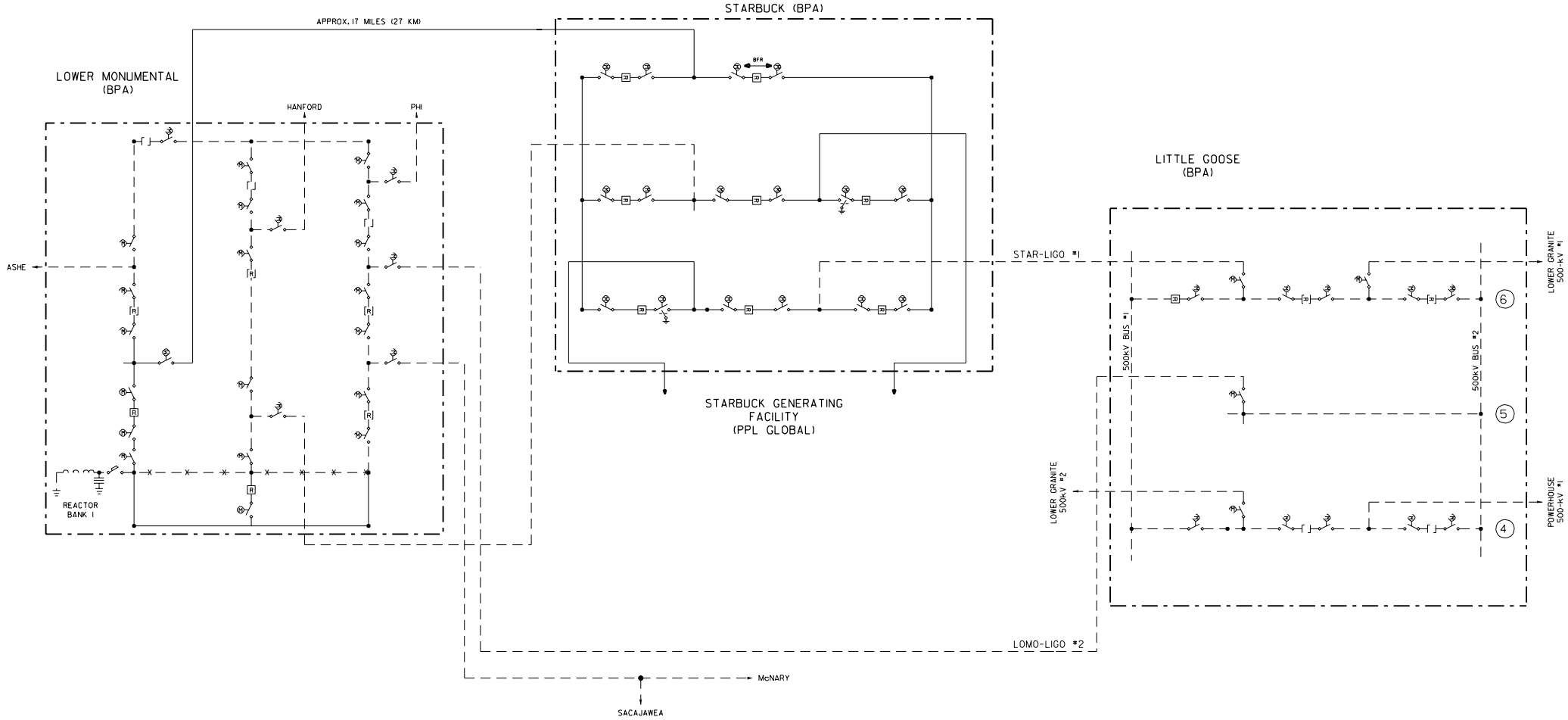

LEGEND:

- — — — — EXISTING EQUIPMENT
- ———— EQUIPMENT, THIS PROJECT
- -x- x-x- x-x- x-x EQUIPMENT TO BE REMOVED

NO.	COMPUTER REVISION ONLY	PLANNING ENGR.	APPROVED

PROJECT SKETCH

UNITED STATES DEPARTMENT OF ENERGY
BONNEVILLE POWER ADMINISTRATION
HEADQUARTERS, PORTLAND, OREGON

PROPOSED ENERGIZATION DATE(S)	OPERATIONS & PLANNING
PRELIMINARY APPROVED DATE	STARBUCK -LOWER MONUMENTAL 500-kV
PLANNING ENGR.	

FINAL APPROVED DATE	SERIAL	SOURCE	SIZE	SHEET	REVISION
	R SKETCH	TO	A1	1 OF 9	Ø

5. Lower Monumental and McNary Area Generation (Smiths Harbor - McNary 500-kV line and Smiths Harbor substation).

Background
This project is required to provide firm long-term 1300 MW of new generation proposed by Newport at Wallula Junction and includes a new substation at Smiths Harbor. This project need is contingent on the building of the Newport generation facility and switchyard at Wallula.

Limiting Outages Addressed
* Loss of the McNary – Smiths Harbor 500 kV line.

Benefit - Generation Integration
This project will allow integration of 1300MW of generation at Smiths Harbor.

Business Case

This project will provide firm transmission for Newport (1300 MW) generation. The primary driver of this project is generation integration contracted for the next 20 years. The estimated cost recovery of this project at current rates is approximately 10 years (Appendix F).

Risk
The risk associated with this project is commercial failure of either generation project after it is completed. This is considered to be unlikely.

Project Description
* Construct approximately 30 miles of new 500-kV line from the new Smiths Harbor substation to McNary substation.
* Develop a new 500-kVswitching station using breaker and half configuration at Smiths Harbor and loop in the existing Lower Monumental – McNary line.
* Add two 500-kV breakers at McNary Substation to terminate the new line.

Alternatives Considered
* Re-build approximately 30 miles of the existing Lower Monumental-McNary 500 kV line. .
* Build approximately 30 miles of the 500 kV line radial to McNary substation without connecting to the existing Lower Monumental - McNary 500 kV line at Smiths Harbor.

(Note: The two alternatives do not require a separate Smiths Harbor 500 kV substation)

Energization Date: Fall 2004
Estimated Cost: $35-40 M

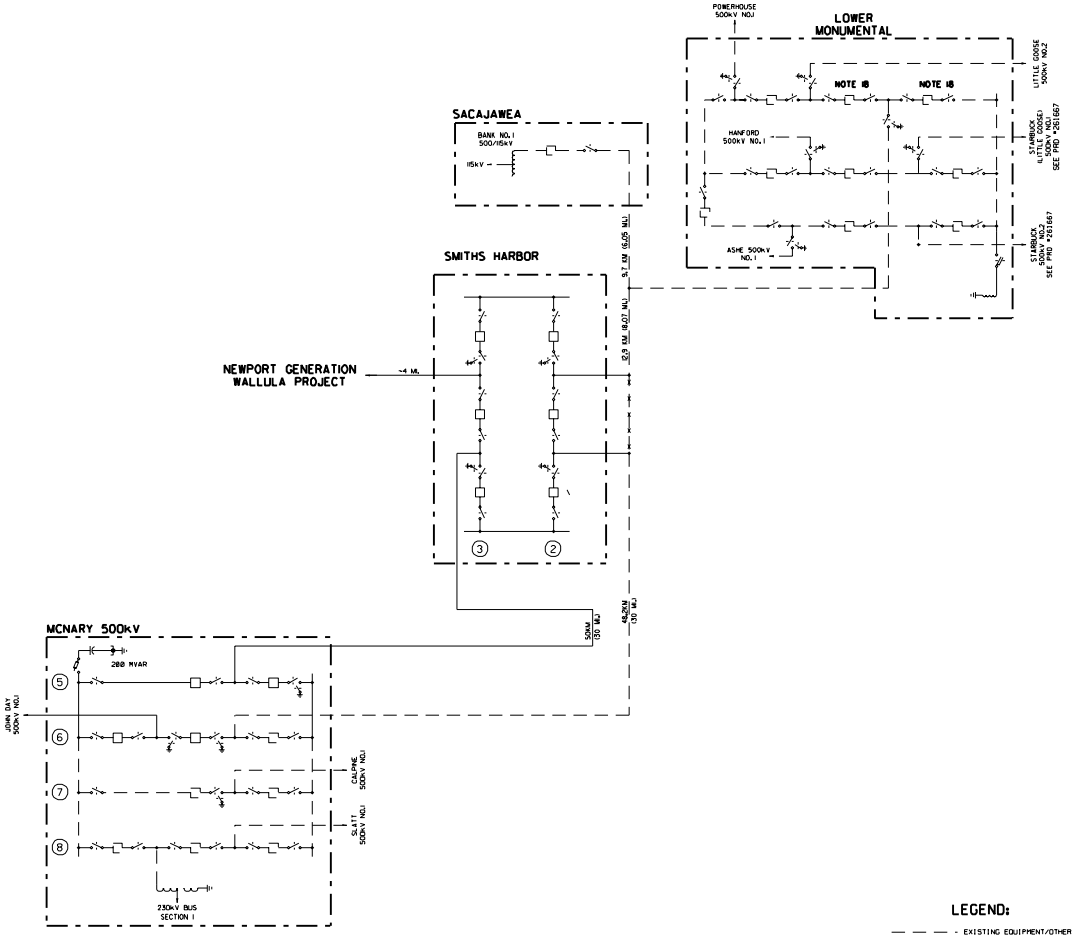

LEGEND:

- - - - - EXISTING EQUIPMENT/OTHER PROJECT

———— EQUIPMENT, THIS PROJECT

NO.	COMPUTER REVISION ONLY	PLANNING DATE	APPROVED

PROJECT SKETCH

UNITED STATES DEPARTMENT OF ENERGY
BONNEVILLE POWER ADMINISTRATION
HEADQUARTERS, PORTLAND, OREGON

PROPOSED GENERATION DATE: 7/01/04	OPERATIONS & PLANNING
PRELIMINARY APPROVED DATE	SMITHS HARBOR-MCNARY 500-kV LINE
PLANNING ENGR: RAVI AGGARWAL	
FINAL APPROVED DATE	SERIAL / SOURCE / SIZE / SHEET / REVISION

6. Cross Cascades North (Schultz Series Capacitors)

Background

This project is required to prevent voltage instability in the Puget Sound area during abnormal cold winter peak loads. Winter peak loads are growing about 200 MW annually (1/5 the size of the city of Seattle). For this condition, without Schultz series capacitors, the Puget Sound area is at risk of voltage collapse leading to significant load loss for outages of 500-kV lines feeding the Puget Sound area. This problem will be further accelerated by the down-stream benefits return obligation to Canada. Since the area has become saturated with shunt compensation, the next alternative is to build a new cross-Cascade Mountain transmission line from the Grand Coulee area into the Puget Sound area. Construction of this project is the only means of meeting immediate load growth and delays the need for the next cross-Cascade transmission reinforcement. The next step after the series capacitor installation could be an upgrade of a 115-kV line to a 230-kV operation between the Mid-Columbia and the Puget Sound area.

Limiting Outages Addressed

* Chief Joseph-Monroe 500-kV line.

Benefit – Load Area Service

This project will increase the Cross-Cascades North transfer capability by 300 MW to serve the Puget Sound Area load. Without this project it would be necessary by 2003 to trip off load in the Puget Sound area under abnormal cold winter peaks for first contingency outages.

Business Case

The primary drivers of this project are load service and Canadian Entitlement return. The project will also delay the need for the next cross-Cascades line. The estimated cost recovery of this project at current rates is between 10 and 16 years (Appendix F).

Risk

The date of need for the project could be delayed if Canadian Entitlement return was purchased within the US, or if additional generation were developed to serve Puget Sound area loads. The later circumstances, however, would increase the need for reinforcement of the I-5 corridor south of Seattle. These are considered to be unlikely.

Project Description

* Add two 500-kV series capacitors (19 ohms each) at Schultz substation in the Schultz-Echo Lake #2 and Schultz-Raver #1 500-kV lines.

Alternatives Considered

* Shunt capacitor additions: The area is saturated with shunt compensation and is currently near operational limits for voltage stability.
* Build new Chief Joseph-Monroe 500-kV #2 line. The estimated cost of this line is more than $200 Million.
* Rebuild the 345-kV line between Rocky Reach and Maple Valley to a 500-kV double circuit line. Construction of this line would have an environmental (visual) impact along Interstate 90 corridor. The cost of this construction would be more than $350 Million.

Energization Date: **Fall 2003**
Estimated Cost: **$25 M**

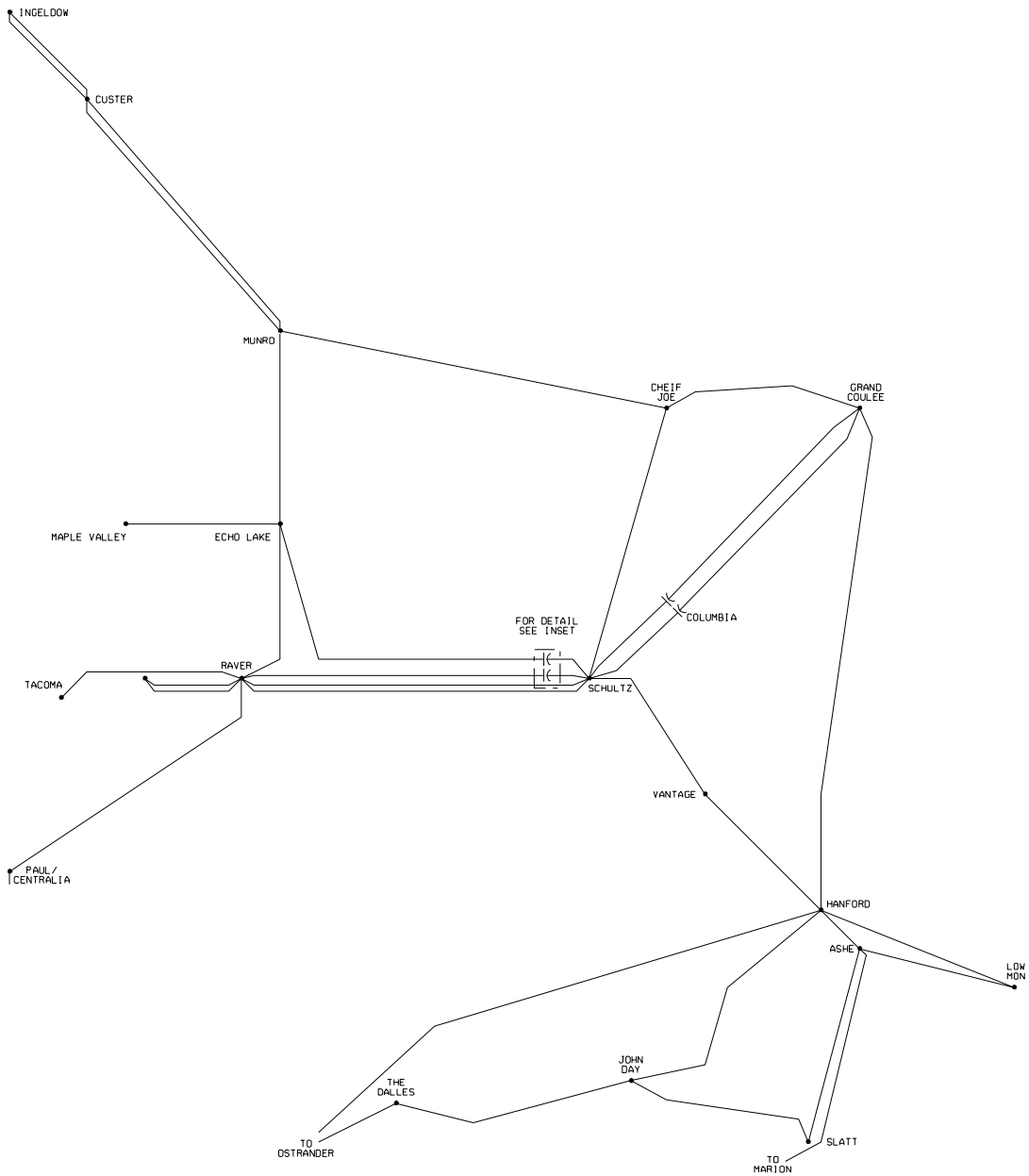

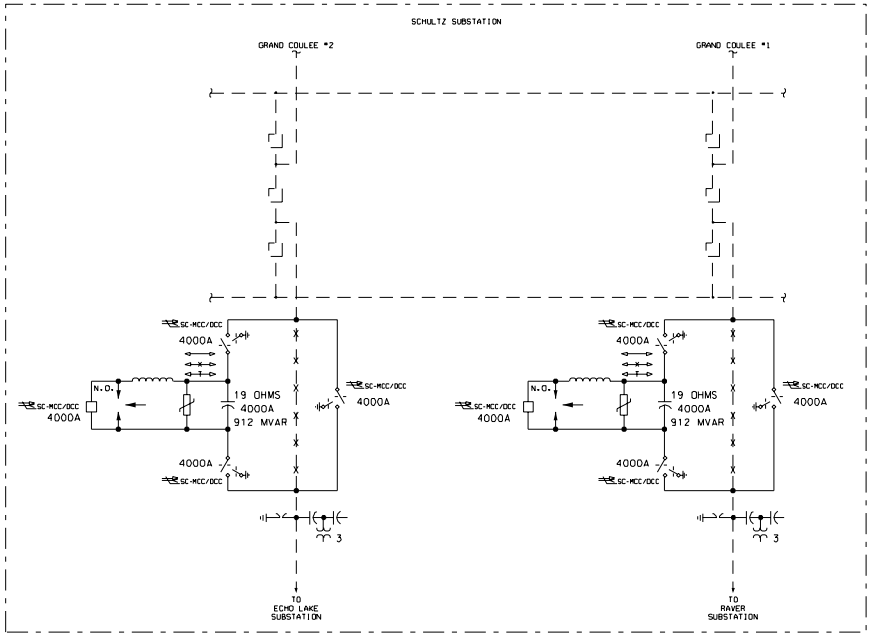

PRELIMINARY
08/07/01

NO.	COMPUTER REVISION ONLY	PLANNING ENGR.	APPROVED

PROJECT REQUIREMENTS DIAGRAM

UNITED STATES DEPARTMENT OF ENERGY
BONNEVILLE POWER ADMINISTRATION
HEADQUARTERS, PORTLAND, OREGON

PROPOSED ENERGIZATION DATE(S) ??????	OPERATIONS & PLANNING
PRELIMINARY APPROVED DATE	SCHULTZ SERIES CAPACITOR ADDITION
PLANNING ENGR.	

FINAL APPROVED DATE	SERIAL BERHANU MAP	SOURCE	SIZE	SHEET	REVISION
		TO	A1	1 OF 1	0

[blank page]

7. Celilo Modernization

Background

After an extensive public review process, BPA has agreed to a long-term commitment to keep the HVDC Intertie at the present transfer capability of 3100MW. The Pacific HVDC Intertie was built more than 30 years ago and the original mercury arc valves are well beyond their design life. Operators of the Los Angles end (Sylmar Converter Station) expect to contract for rebuilding of their terminal by Nov. 2001.
BPA will replace the 42 mercury arc valves in the oldest part of the Celilo Converter Station with new thyristor valves. New cooling systems will be installed for the new converters and all of the other older converters in the station. Without replacement of the mercury arc converters by BPA, Intertie capacity would be reduced to 1100 MW. The valve replacement and related control and protection modifications will improve the reliability and maintainability of the HVDC facility. The changes will also simplify Intertie operation, thus reducing high operating and maintenance costs. The control system replacement will be provided by the same supplier chosen to rebuild the Sylmar Converter Station in California. Scheduling of the Celilo modernization will be coordinated with rebuilding of the southern terminus at Sylmar in southern California in order to minimize outage times.

Benefit – Interregional Transfers

This project enables maintaining the capability to transfer up to 3100 MW between the Northwest and Southern California in coordination with similar steps being undertaken at Sylmar. Without this project HVDC transfers would be limited to 1100 MW once it is no longer possible to maintain existing mercury arc valves.

Business Case

The primary driver of this project is interregional transfer. A public review process indicated a 20-year benefit for this project in excess of $120 M[1] and the review process supported maintaining the 3100 MW capacity. This is about $5M less benefit then the alternative of maintaining the existing mercury arc converters for 15 years (an optimistic assumption) followed by a derate to 1100 MW. This project has the advantage of retaining the full Celilo-Sylmar HVDC line capacity at 3100 MW and removes the uncertainty as to likely mercury arc valve life. Current estimates of valve life are in the range of 5-10 years. Retirement reduces environmental concerns related to mercury contamination. Significant societal benefits will also result from this project.

Risk

The estimated use of this project is based on past projections. Recent use has increased over this to serve California needs resulting from Path 15 constraints. A reduction in future use of the HVDC tie would reduce the benefits of this project. Based on the continuing need for resources to serve California and the construction of generation resources in the NW targeted for this purpose, this is considered to be a low risk project.

[1] This does not include prior indebtedness incurred or prior revenues received.

Project Description

* This project will consist of the replacement of the mercury arc valves (groups 1 through 6) with solid state thyristor valves including cooling systems. This effort will also require the replacement of ancillary equipment such as the control and protection systems and mechanical and electrical facilities.

Alternatives Considered

* Maintain DC Intertie at 3100 MW by maintaining mercury arc valves for 15 years and then reduce to 1100MW.
* Maintain DC Intertie at 3100 MW by maintaining mercury arc valves and then derate to 1100 MW by October 2003.

Energization Date: Fall 2003
Estimated Cost: $50 M

PACIFIC HVDC INTERTIE

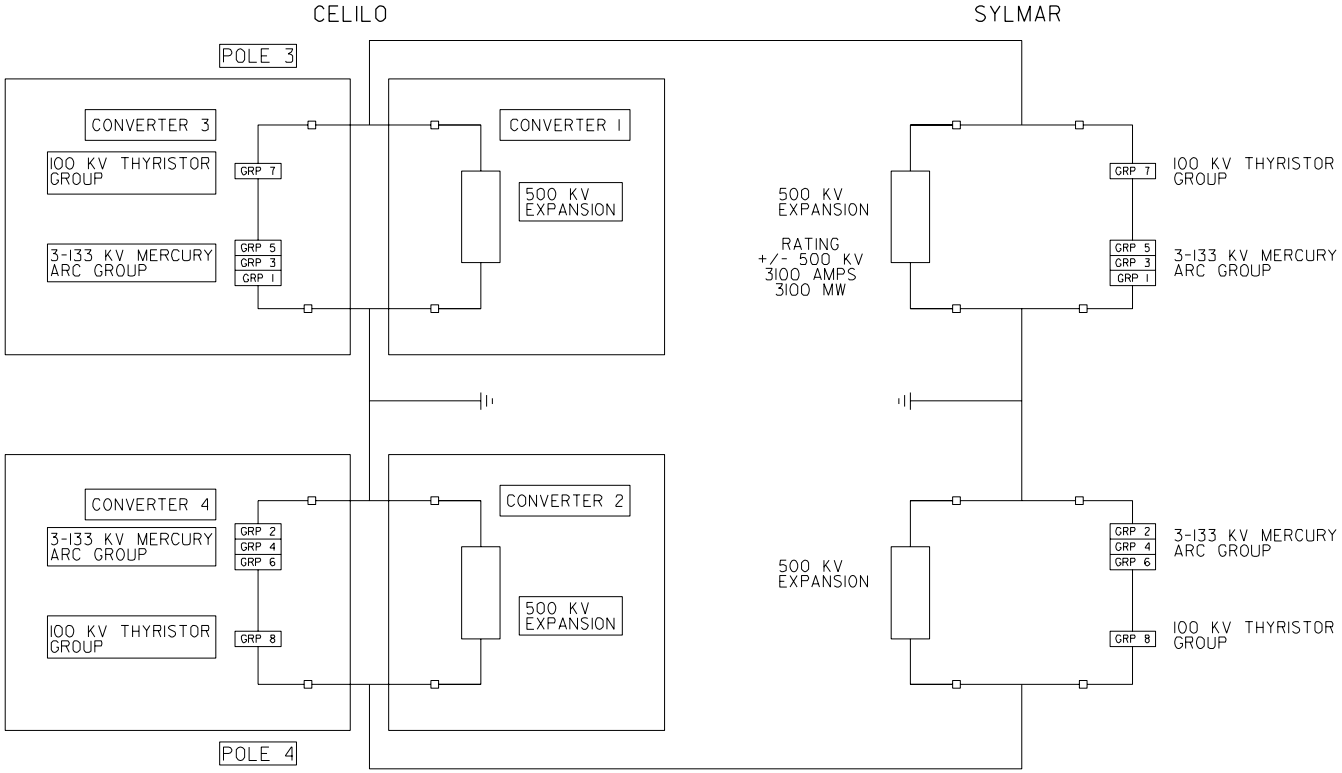

KYLE KOHNE 108/10/01

[blank page]

8. I-5 Corridor Generation Additions (Monroe – Echo Lake #2 500-kV Line)

Background
This project will: (1) maintain sufficient capacity to allow expected bi-directional interchange of power between the PNW and Canada (including The Canadian Entitlement Return); (2) increase load serving capability in the Puget Sound area by reinforcing the NW Washington transmission system to insure reliable operation; and (3) allow integration of new generation.

Limiting Outages Addressed
* Echo Lake-Monroe 500 kV line No. 1

Benefit – Load Area Support and Interregional Transfers
This project will increase in this portion of the Puget Sound area the transfer capability between PNW and Canada by approximately 600 MW in the south-to-north direction and approximately 850 MW in the north-to-south direction.

Seattle City Light has indicated that they plan to utilize their Maple Valley-SnoKing-Bothell 230 kV lines for their own load service sometime in the future. Bonneville has contracted for the use of the lines to enable Canadian Entitlement return transactions and at some future date may not be available for this purpose. Addition of the Monroe-Echo Lake 500 kV line will significantly reduce the loading on these and other lines, thus allowing more capacity for load service.

This project will also add reliability margin to the system.

Business Case
The primary drivers of this project are load service, Canadian Entitlement return and north to south transfers. The estimated time for cost recovery of this project at current rates is between 10 and 16 years (Appendix F).

Risk
The date of need for the project could be delayed if Canadian Entitlement return was purchased within the US, or if additional generation were developed to serve Puget Sound area loads. The later circumstances, however, would increase the need for reinforcement of the I-5 corridor south of Seattle. These are considered to be unlikely.

Project Description

* Construct approximately 32 miles of a new single circuit 500 kV line between BPA`s Echo Lake substation and Monroe substation.
* Add terminal facilities at Monroe and Echo Lake Substations to terminate the new line.
* To meet the WSCC Reliability Criteria for simultaneous multiple-circuit outages (N-2), it is recommended that this line be constructed on a separate ROW, at least 1200 feet from the existing 500 kV ROW.

Alternatives Considered

* Rebuild the Maple Valley-Monroe 230 kV line to 500 kV operation.
* Build from Echo Lake to a tap on the Chief Joseph-Monroe 500 kV line. This tap point is east of Monroe.
* Pursue prudent modifications to the WSCC reliability criteria

Energization Date: Fall 2005
Estimated Cost: $90 M

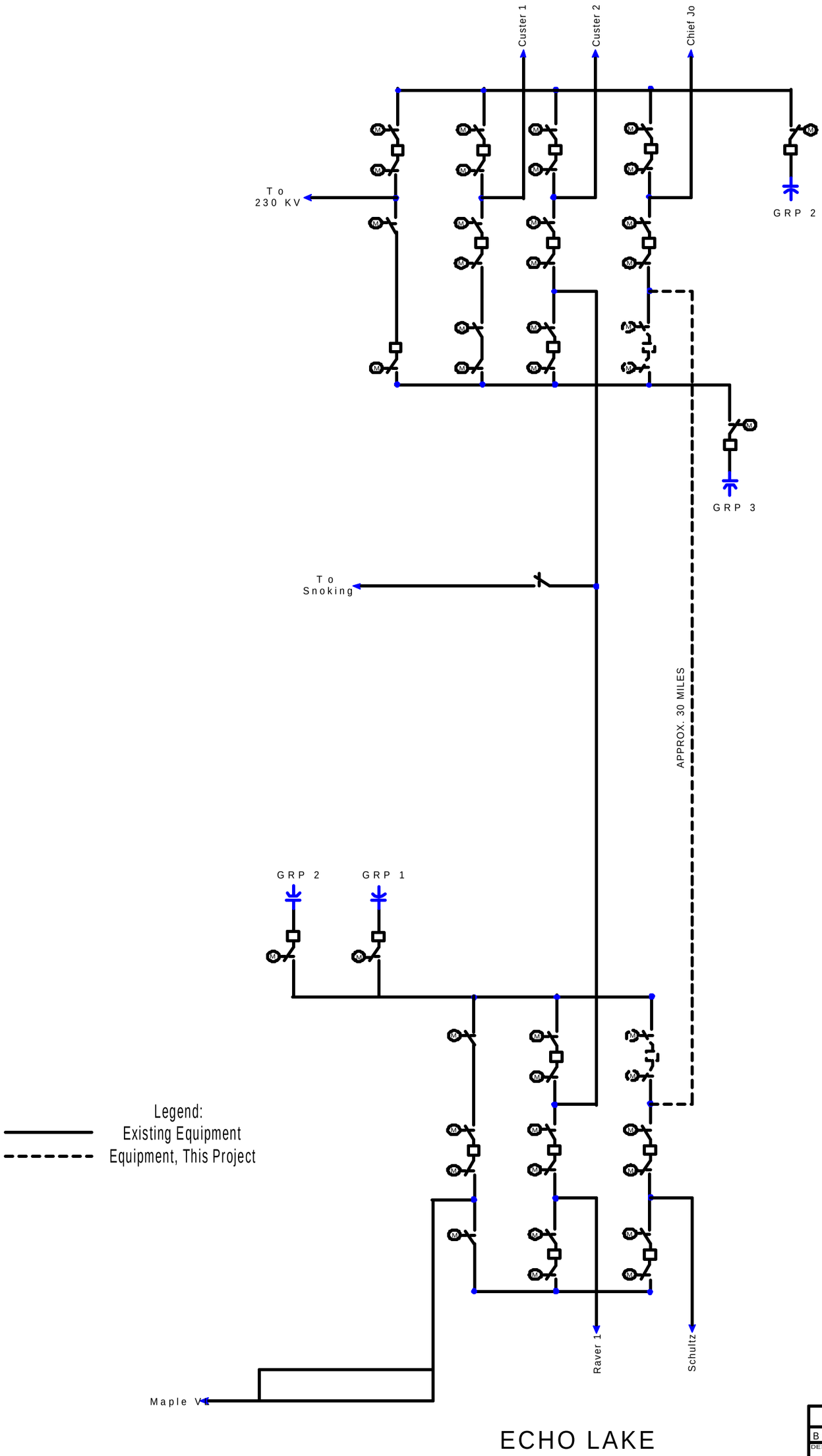

PROJECT SKETCH

BONNEVILLE POWER ADMINIS

DESCRIPTION

ECHO LAKE TO MONROE 500-KV LINE NO.2

1 OF 1

[blank page]

9. West of Hatwai Additions (Bell-Coulee 500 kV line, 500 kV series compensation)

Background

These facilities are required to relieve congestion across the West of Hatwai (WOH) cut plane in Eastern Washington. The new facilities will relieve the constraint between eastern generation facilities and west-side load centers within the Pacific Northwest.

Historically, the West of Hatwai transmission path has been rated at 2800 MW. The WOH path is fully subscribed with firm obligations from generation east of the cut plane. Although this path has experienced congestion in the past, typically it has been managed on an operational basis and has not caused severe resource curtailments. Recent load reductions at the Kaiser Mead aluminum plant (Spokane, Washington) and at Columbia Falls Aluminum Company (Kalispell, Montana) have decreased load east of the West of Hatwai cut plane by approximately 800 MW. The energy that used to serve the load is available to flow across the WOH cut plane causing increased congestion.

Experience during Summer 2001 showed that this increased flow could not be accomodated by the existing transmission facilities using standard operating practices to mitigate the limitations. The congestion caused by these load reductions as well as strict adherence to reliability standards prevented much needed resources east of the cut plane to reach the load centers in the Pacific Northwest and California. These constraints caused economic hardship due to the curtailment of resources and the high cost of replacement energy.

In an operational attempt to minimize these impacts, temporary remedial action schemes (RAS) were implemented to increase transfer capability back to historic limits. These new RAS schemes include dropping an additional 800 MW of generation (bringing the total generation dropping to more than 2400 MW) and operating key load service transmission facilities normally open. We consider the RAS to be short-term operating remedies which have increased the exposure to load loss and uneconomic curtailments.

Limiting Outages Addressed

* Taft-Dworshak 500 kV outage.
* Dworshak-Hatwai 500 kV outage.
* Hatwai-Lower Granite 500 kV outage.
* Taft-Bell 500 kV outage.
* 230 kV line outages between Bell and Coulee substations.
* 230 kV Bus outages
* Other outages required by WSCC standards

As a result of facility over loads caused by these outages, the WOH transfer capability is limited to levels substantially below present firm obligations. This reduction in transfer capability also limits the ability to integrate additional generation resources east of the cut

plane. Without aggressive remedial actions, these outages result in thermal overloads on the underlying transmission system and may also cause transient stability problems that can impact the entire West Coast.

Benefits – Congestion Relief

The temporary remedial action schemes added this Summer are not intended to be used as part of a long-term solution for WOH congestion relief. The addition of the G-9 Phase 1 facilities identified below will restore the West of Hatwai transfer capability to approximately 2800 MW, an increase of 800 MW. Without these facilities firm transfer agreements cannot be supported and the WOH path would be limited to 2000 MW, excessive remedial actions are required, and transfer curtailments will continue to be necessary. The completion of Phase 1 (G-9) and Phase 2 facilities would increase the WOH capability to approximately 4000 MW. Specific system benefits of the Phase 1 additions are listed below:

1. Load Service Obligations west of the West of Hatwai cut plane

* Curtailments can be managed on an operational basis
* Provides for fully meeting existing obligations and future needs with completion of Phase 2 additions

2. BiOp Commitment

* Supports 2000 Fish BIOP by providing flexibility to spill water on the lower Snake hydro projects

3. Reliability

* Restores generator dropping requirements to levels prior to 2001
* Eliminates 230 kV RAS transmission line tripping and 115 kV sectionalizing
* Reduces exposure to re-dispatch

4. O & M

* Allows required maintenance on parallel facilities without significantly reducing transfer capability
* Reduces equipment loss of life – less thermal stress, reduces line tripping, reduces generator tripping

Business Case
The primary driver of this project is to restore interregional transfers from east of the WOH cut plane. The estimated cost recovery is between x and y years. BPA TBL also made a commitment in the 2000 Biological Opinion to construct a project to provide future flexibility to accommodate potential spill increases on the Lower Snake River. This path is fully subscribed today with requests for additional service. This project will also provide flexibility for outages and other system changes such as long term shutdown of the aluminum plants.

Risk
This project is needed to provide additional transmission capacity west of Spokane to offset capacity reductions caused by shutdown of system load at the Kaiser and Columbia Falls aluminum plants and the addition of generation at Rathdrum. Restoration of these loads would reduce the need for this project, however, the volatility of the global market for aluminum puts the system at risk for reoccurrence of the constraint.

Project Description
BPA proposed the following transmission projects to mitigate the WOH problem.

Phase 1

* The plan of service is to remove one of the Bell-Grand Coulee 115 kV lines and construct a new 500 kV line of approximately 83 miles of new 500 kV transmission line from Bell substation to Grand Coulee substation in its place.
* Construct a 500 kV switch yard at Bell consisting of 2 or 3 bays.
* Add a 500 kV line terminal at the USBR Grand Coulee substation.
* Add series capacitors at Bell Substation in the Taft-Bell 500-kV line (50%/25.13 ohms).
* Add series capacitors at Dworshak Substation in the Taft Dworshak 500-kV line (50%/28.05 ohms).
* Rebuild the series capacitors at Garrison on the two Taft lines to 2000 A.

The new Bell-Coulee 500 kV line will be located adjacent to the existing Bell-Coulee 230 kV double circuit line. The present WSCC criteria require no cascading for credible common mode circuit loss of three or more lines on a transmission corridor. Changes in the NERC/WSCC Criteria are under review. If required, mitigation can be accomplished by implementing additional RAS

Phase 2

In addition to the initial project G9 projects, other reinforcements are required on the 230 kV system to maximize the transfer capability across the West of Hatwai cut plane. Local problems on the sub-grid in Western Montana and in the Spokane and Lewiston areas have an adverse effect on the main grid system when hydro generation in Western Montana is at high levels and/or when loads are peaking in the Spokane and Lewiston areas. Infrastructure projects G15, G18, and G20 would help to mitigate these problems.

* G15 – Libby – Bonners Ferry line Rebuild
* G18 – Hatwai - Lolo 230 kV line
* G20 – Sand Creek - Bell 230 kV line and 230/115 kV transformer

The following are non-federal transmission projects under consideration that may serve to meet the Phase 2 requirements as alternatives to the above:

* A1 Noxon-Shawnee Reinforcement
    * Complete the second Noxon-Pine Creek 230 kV line
    * Re-conductor/Re-build the Benewah-Pine Creek 230 kV line
    * Construct the Benewah-Shawnee 230 kV line
* A2 Lewiston Area Reinforcement
    * Construct the Dry Creek 230 kV switching station
    * Reconfigure the Hatwai 230 kV substation
* A3 Spokane Area Reinforcement
    * Construct the Lancaster-Rathdrum 230 kV line
    * Construct the Beacon-Rathdrum 230 kV double circuit line

Some combination of the phase 2 projects may be required to mitigate the WOH cut plane congestion and joint studies are being conducted between Avista Corp. and BPA to determine the best plan.

A key element during the construction of the necessary projects to relieve the congestion across the WOH cut plane is the development of a coordinated project schedule. In order to minimize environmental impacts, speed up project completion, and reduce costs, a majority of these projects will be built on existing transmission rights of way. This will require key transmission facilities being removed from service for prolonged periods of time to facilitate construction. These construction outages will result in curtailments to the WOH cut plane. A thorough analysis will be required to determine the best order to construct the proposed projects. Also, additional projects may need to be constructed to maintain transfer capabilities during the construction of other facilities.

Alternatives Considered

Two alternatives to the Bell-Coulee 500 kV line project were considered. These alternatives are:

1. Bell-Ashe 500 kV line.

   * This line is estimated to be 145 miles requiring new right-of-way. The other portions of the project would be the same as for the Bell-Coulee 500 kV line. Estimated cost for this project is $210-215 M.
   * Although the Bell-Ashe 500 kV line performs slightly better technically than the Bell-Coulee 500 kV line, it costs about $95 M more.
   * The Bell-Ashe 500 kV line alternative could potentially require less RAS than a Bell-Coulee 500 kV line to meet reliability criteria since it is not located on parallel ROW with the existing Bell-Coulee 230 kV double circuit line.
   * One risk associated with the Bell-Ashe 500 kV line alternative is the requirement for 145 miles of new ROW. This increases the cost significantly and would delay completion by at least 2 years compared to the Bell-Coulee 500 kV line. Another risk associated with this alternative is that a Bell-Ashe 500 kV line would have to cross the Hanford National Monument. This would make siting very difficult and could delay project completion even further.

2. Taft-Lower Granite 500 kV line.

   * This line is estimated to be 150 miles requiring new right-of-way. The other portions of the project would be the same as for the Bell-Coulee 500 kV line.
   * Estimated cost for this project is $220-225 M, approximately $105 M more than the Bell-Coulee alternative.
   * In addition, this project would also require building a third 500 kV line from Lower Granite to the planned Starbuck substation, approximately 20 miles, to realize it's full potential. This would also tend to push more loading on the West-of-McNary path, which is already constrained.
   * The Taft-Lower Granite alternative may not perform as well as the alternatives from Bell substation to integrate new generation. New generation is being proposed in the North Idaho and Spokane areas and may be better delivered through 500 kV lines west of Bell substation.
   * One risk associated with the Taft-Lower Granite 500 kV line alternative is the requirement for 150 miles of new ROW. To meet WSCC reliability requirements this new line could not be constructed adjacent to the existing line and provide a significant increase in allowed transfer capability. This increases the cost significantly and would delay completion by at least 2 years compared to the Bell-Coulee 500 kV line.

Phase 1 Energization Date: **Fall 2004**
Phase 1 Estimated Cost: **$115-120 M**

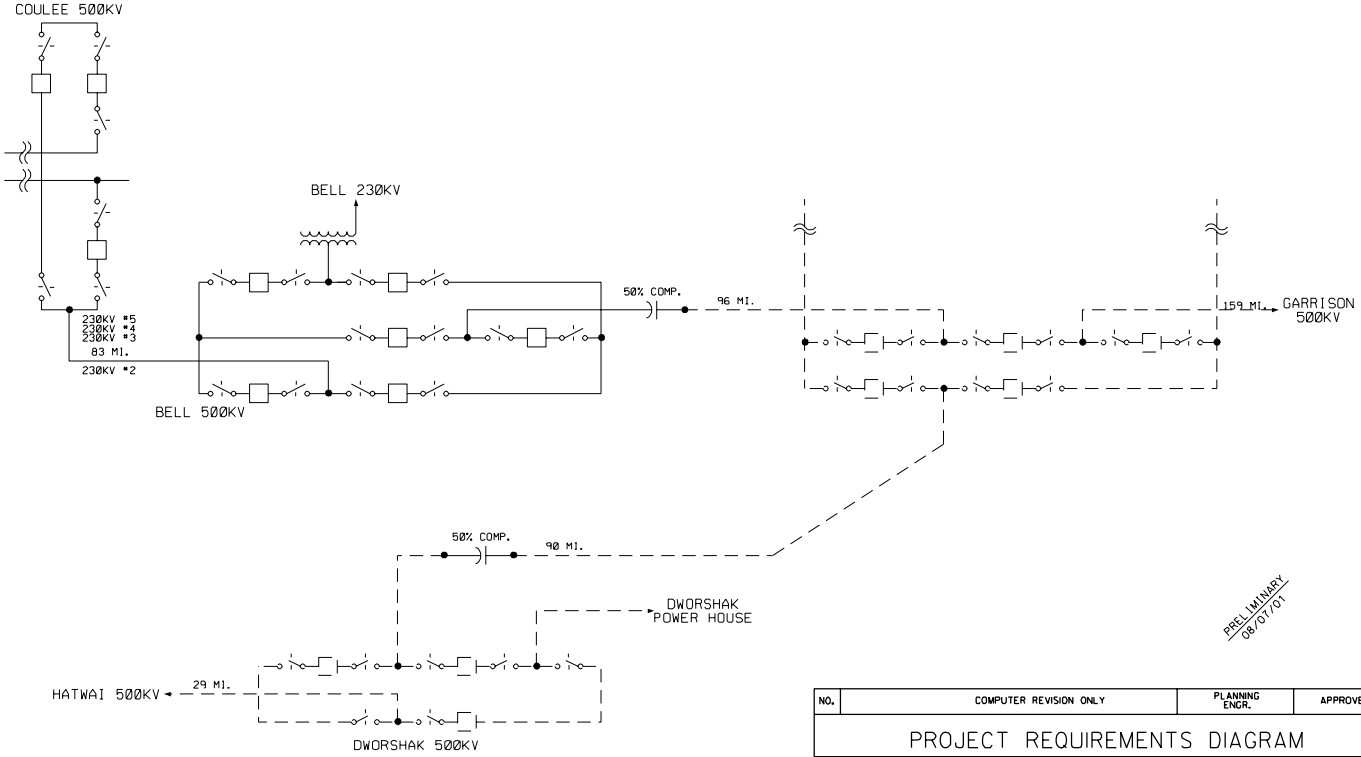

NO.	COMPUTER REVISION ONLY	PLANNING ENGR.	APPROVED

PROJECT REQUIREMENTS DIAGRAM

UNITED STATES DEPARTMENT OF ENERGY
BONNEVILLE POWER ADMINISTRATION
HEADQUARTERS, PORTLAND, OREGON

PROPOSED ENERGIZATION DATE(S)	OPERATIONS & PLANNING
PRELIMINARY APPROVED DATE	BELL-COULEE 500KV TRANSMISSION LINE PROJECT
PLANNING ENGR.	
FINAL APPROVED DATE	

SERIAL	SOURCE	SIZE	SHEET	REVISION
262713	TO	A3	4 OF 4	0

[blank page]

Appendix E – Risk and Uncertainty

Long-term capital investments by their nature entail risks. A number of factors can delay or reduce the need for transmission fixes. In the traditional regulatory model for a vertically integrated utility these risks were understood and the allocation of costs for managing the risks were well established. Structural changes such as wholesale competition, open transmission access, retail access and the formation of a Regional Transmission Organization (RTO) alter transmission risk management. Other elements remain the same. Steps must be taken to protect against stranded transmission investments.

Risks Associated with Meeting Adequacy Requirements

Loads may grow slower (or faster) than projected.

Demand Side Resources (DSR), including conservation, load management and distributed resources may reach greater penetration than expected.

Pricing approaches, including the congestion management model proposed for the RTO, will encourage DSR.

Planning criteria can change imposing different requirements.

Risks Associated with Congestion Relief

New generation may be located close to the loads.

Pricing approaches, including the congestion management model proposed for the RTO, will encourage more informed generation siting and operating decisions. Appropriate loss models will amplify the locational price signals.

Proposed generation projects or requested transmission agreements may not materialize.

Risks Associated with Structural Change

Cost recovery under an RTO is likely to be different than current practices. In particular, congestion relief is generally to be paid for by those who benefit.

Operation of the system will change, which may alter congestion patterns.

Emerging technologies may alter production, consumption and transmission.

Over/Under Building

In the past 15 years of structural change, utilities have made only limited transmission investments.

Many observers believe that the grid has been pushed to its limit, with increased risk of outages, congestion impeding wholesale trade, and the inability to integrate needed new generation.

Transmission represents 5-10 percent of the cost of energy.

Decision makers will need to consider managing the risks of overbuilding described above against the risks associated with underbuilding.

Tools to Manage the Risks

Evaluate DSR alternatives.

Examine proposed transmission fixes under several load forecast and generation siting/operation scenarios.

Do not commit to projects before necessary.

Consider incremental fixes, such as RAS, upgrades, FACTS and conventional series/shunt compensation, lower voltage lines and single circuit vs. double circuit.

Require long-term firm wheeling agreements covering a share of any incremental capacity before committing to projects. Use appropriate credit risk management.

Seek investment partners to spread the risks.

Examine cost recovery and allocation under structural change, such as under an RTO and retail access.

Use open public processes for planning and examining alternatives.

Project Risk Matrix

G	Project	Meeting Adequacy Requirements	Congestion Relief	Structural Change
1	Puget Sound Area Additions	?	?	?
2	N of Hanford/N of John Day		?	?
3	West of McNary Project		?	?
4	Starbuck Generation			?
5	Low Mon and McNary Gen			?
6	Cross Cascades North	?	?	?
7	Celilo Modernization		?	?
8	I-5 Corridor Gen Additions	?	?	?
9	Coulee – Bell 500-kV line	?	?	?

Appendix F - Business Case Information

Business Case Categories

For each project the business case is developed based on the expected or planned use considering the following factors:

1. Adequacy for load service
2. Canadian Entitlement return
3. generation integration
4. internal or intertie transfers
5. reliability (changes in the criteria)
6. operations and maintenance savings
7. Biological Opinion (BiOp) commitments and Endangered Species Act
8. societal benefits

Benefits ascribed to each project for the business case are summarized in Table F-1.

General Observations

These projects are planned to represent the least cost alternative to meet existing and expected obligations and needs as described above. Least cost is viewed in the broadest sense including capital costs, O&M, loss savings, environmental impacts, risks, uncertainties and flexibility.

The projects are subject to the risks associated with meeting adequacy requirements, congestion relief and structural change (see Appendix E).

Specific Project Information

Project specific information is included with each project given in Appendix D.

Cost Recovery Analysis

Table F-2 summarizes the results of a cost recovery analysis for each project and for the G-9 projects in total excluding G-7, the Celilo valve replacement, which was covered under a separate public process. The payback dates in Table F-2 only account for transmission revenues and do not include utility and consumer benefits associated with reduced wholesale market prices from competition, reduced exposure to redispatch costs, and fewer power outages which would have significantly shortened the payback periods.

Appendix F Table 1

	G1	G2	G3	G4	G5	G6	G7	G8	G9
Load Service	x					x		x	
Entitlement Return	x					x		x	
Generation Integr.			x	x	x			x	
Transfers		x					x		x
Reliability	x	x	x	x	x	x	x	x	x
O&M Savings							x		
BiOp		x							x
Other									

Appendix F Table 2. Cost Recovery Under Current Rates

Discount Rate		9.00%
Inflation Rate		2.60%
Real Disc. Rate		6.24%

Project		Cost	Cost	Capacity	Rate	Cst. Rcvry	Cst. Rcvry	Other
		(direct)	(loaded)	Added		Years	Years	Benefit
		($M)	($M)	MW	$/KW-Mo.	CSR 1.0	CSR 0.5	
Kangley - Echo L	G1	34	45	600	1.013	10	16	
Schultz - Black Rock	G2	80	107	600	1.013	19	>35	BiOp Benefit
McNary - John Day	G3	88	117	1200	1.013	10	*	
Lo Mon - Starbuck	G4	21	27	1200	1.013	10	*	
Smiths Hbr - McNary	G5	28	38	1300	1.013	10	*	
Schultz series caps	G6	18	25	300	1.013	10	16	
Celilo Modernization	G7	37	50	-	Business case described in Appendix D			
Monroe - Echo Lake	G8	67	90	600	1.013	10	16	
Bell - Coulee	G9	87	116	800	1.013	35	35	BiOp Benefit
Total		459	615			14	18	

Notes:

Cost recovery for projects in composite is in the last row
Transfers to Canada on west side increased by approximately 575 MW
Load Service to Puget Sound loads increased by approximately 825 MW
CSR (Capacity Served Ratio) refers to ratio of incremental wheeling to added transmission capacity
1.0 = fully subscribed
0.5 = one-half subscribed
Assumes no escalation on power rates
* Projects 3,4&5 have commitments in place for the full incremental capacity
Rate used based on October, 2001 published rate

[blank page]

Appendix G – Right-of-Way Separation

The projects Monroe – Echo Lake and Schultz – Black Rock make reference to need for right of way (ROW) separation. The approved NERC/WSCC Planning Standards require:

?? Category C performance for loss of two lines, and

?? No cascading for loss of all lines in a ROW.

Provision has been made for exception from these requirements in cases where the risk of a simultaneous common mode event is very low although this is very difficult to demonstrate for all but short lines that are on the same ROW. The WSCC Board of Trustees has approved the Phase 1 Probabilistic Base Reliability Criteria Implementation Procedure which that allows an upgrade to "no cascading" for an estimated Mean Time Between Failure greater than 30 years and to "exploratory" for a MTBF of greater than 300 years. A single event that results in cascading will be reviewed to determine if it should be declassified as a category upgrade facility. BPA has recommended that these lines be constructed on a separate ROW since it would not be possible to demonstrate a 300 year MTBF to be considered as "exploratory" due to their length and that the actions taken to meet a "no cascading" requirement are almost as onerous as that which would be required to meet Category C.

It should be noted that proposals have been made to accept a "No Cascading" standard for all reasonably probable common mode failures. This allowance would also carry a requirement for safety nets. Safety nets could be load shedding by undervoltage relays or additional remedial action schemes. In that dropping of firm load for this class of disturbance is a change in WSCC philosophy, any move to such a standard would require submittal through due process and approval by the WSCC Board of Directors.

[blank page]

Appendix H. Return of Canadian Entitlement

Upon ratification of the Columbia River Treaty in 1964, Canada built three large storage dams (Duncan, Arrow and Mica) on the Canadian side of the Columbia, to facilitate flood control protection in both Canada and the U.S., and to increase power generated on the U.S. side at U.S. dams. This increased power was called the "downstream power benefits," and the U.S. and Canada share in those benefits equally. The Canadian half is called the "Canadian Entitlement," and is owned by the Province of British Columbia. Certain elements of the Treaty can be terminated by either party after 2024 with 10 years notice.

Canadian Entitlement to downstream power benefits was sold to a nonprofit organization, the Columbia Storage Power Exchange (CSPE, a consortium of 41 U.S. Northwest utilities) under a contract called the Canadian Entitlement Purchase Agreement (CEPA) for a period of thirty years following the Treaty-specified required completion date for each Canadian storage project. Purchase of Entitlement under CEPA expired 31 March 1998 for Duncan, and 31 March 1999 for Arrow, and will expire 31 March 2003 for Mica.

On 1 April 1998 Entitlement power began returning to Canada at the U.S.-Canada border, over existing power lines, as established by international agreement. For the period 1 August 2000 through 30 September 2001, the amount returned for Duncan and Arrow was 277.4 average annual megawatts of energy, scheduled at rates up to 794 megawatts ("peak," or capacity). Together with the Canadian Entitlement power still being delivered to CSPE utilities, **total** Canadian Entitlement currently stands at about 533 average annual megawatts, scheduled at rates up to 1430 megawatts. At the same time, an equal amount of power ("American Entitlement," if you will) is used as a part of Bonneville's resource stack to serve its customers.

The amount of power that makes up Canadian Entitlement is determined six years in advance, through a series of hydroelectric power studies jointly called the Assured Operating Plan and the Determination of Downstream Benefits. Once agreed to by the Canadian and U.S. Entities which oversee the Treaty, the Canadian Entitlement power for six years out becomes fixed and must be delivered – regardless of actual operating benefits which are affected by rainfall, snowpack, river constraints, generators or transmission line outages, and deratings of transmission paths for reliability or other reasons (which frequently happens at the interconnection between the U.S. and Canada).

The U.S. Government is obligated by the Treaty to acquire sufficient generating and transmission resources to deliver Canadian Entitlement, either to the border or to CSPE utilities with a level of reliability equivalent to firm service provided any of Bonneville's firm customers in the Northwest.

Future Entitlement Obligations

The following Canadian Entitlement delivery obligations are based on Assured Operating Plans for the 1997-98 through 2004-05 operating years which have been agreed upon and signed by the U.S. and Canadian Entities. The Entities' staff are currently working on preparing the 2005-06 AOP. For detailed monthly schedules, see Entitlement Schedule. While the specific amounts of delivery obligations can not be determined beyond the AOP, the capacity is expected to fluctuate between 1100 MW and 1500 MW as described in footnote 8 on the next page.

CANADIAN ENTITLEMENT AMOUNTS DELIVERED TO THE BORDER (Energy in average MW and Capacity in MW)

Start Date	AOP/ DDPB	Total Energy Entitlement	Energy Entitlement Owed 1/	Energy 2/ Delivered to Border	Total Capacity Entitlement	Capacity Entitlement Owed 1/	Capacity 3/ Delivered to Border
Apr 1, 1998 .	1998-99.....	553.3	50.0	48.26	1229.6	111.1	109
Aug 1, 1998	1998-99	562.7	50.8	49.03	1514.7	136.8	134
Apr 1, 1999	1998-99	562.7	308.6	297.88	1514.7	830.6	815
Aug 1, 1999	1999-00	559.5	306.8	296.14	1461.9	801.7	787
Aug 1, 2000	2000-01 /4	508.4	277.4 4/	267.76	1447.3	793.7	779
Aug 1, 2001	2001-02	532.6	292.1	281.95	1427.1	782.6	768
Aug 1, 2002	2002-03	534.5	293.1	282.92	1170.7	642.0	630
Apr 1, 2003	2002-03	534.5	534.5	516.3	1170.7	1170.7	1149
Aug 1, 2003	2003-04	537.3	537.3	519.0	1176.4	1176.4	1154
Aug 1, 2004	2004-05 /5	537.3	537.3	519.0	1176.4	1176.4	1154
Aug 1, 2005	2005-06	535.1	535.1	516.9	1218.0	1218.0	1195
Aug 1, 2006	2006-07 6/	7/	7/	7/	8/	8/	8/

Notes:

1. The Energy and Capacity Entitlement amounts owed to Canada ramps up to the full amount of the Entitlement in 2003 based on the ratio of storage benefits no longer sold to CSPE compared to the total Canadian Treaty storage. For April 1, 1998, first delivery of Entitlement was based on a 1.4/15.5 portion of the computed entitlement. On April 1, 1999, the ratio increased to 8.5/15.5, and April 1, 2003, the ratio increases to the full amount. The 2000-01 Energy Entitlment includes a reduction of 2.5 aMW by the 4/5/95 Entity Agreement.
2. The Entities have agreed to reduce Energy amounts delivered to BC/U.S. border by 3.4% for U.S. transmission losses, plus an additional 0.2% for the 1997-98 through 2002-03 AOP's that don't include step-up transformer losses, for a total of 3.6% losses.
   Disposal of the Entitlement directly in the U.S. has been approved by the March 29, 1999, Entity Agreement and Exchange of Notes.
   Amounts delivered within the U.S. will include standard TBL 1.9% transmission losses plus, plus the 0.2% step-up transformer losses prior to August 1, 2003, for a total reduction of 2.1%.
   Amounts delivered to the border will be based on the monthly rate of energy owed times the monthly hours, rounded to the nearest MWh, then reduced by the transmission loss and rounded to the nearest MWh. Beginning Aug. 1, 2001, the loss is determined by the total obligation so that the scheduled amount plus losses equals the gross obligation.
3. The Entities have agreed to reduce Capacity amounts delivered to the BC/U.S. border by standard BPA system transmission losses (currently 1.9%). The Operating Committee has agreed to round Capacity values to the nearest whole MW.
4. The 2000-01 Energy Entitlement includes a 2.5 aMW reduction from the calculated value due to an April 5, 1995, Entity agreement on nonpower requirements.
5. 2004-05 AOP/DDPB values are the same as the 2003-04 AOP/DDPB.
6. Study not yet completed. Expect slight decline in energy, little change in capacity.
7. Expect slow decline of 2-3 aMW per year, although + or - >50 MW is remotely possible.
8. Likely to fluctuate between about 1100 MW and 1500 MW, in future years, with a very small chance of values greator than 1500 MW

Appendix I. Infrastructure Additions *
PHASE 2 and 3 (G-10 through 20)

Phase II Infrastructure Additions
The following are examples of projects under study for consideration:

10. Portland Area Additions (Pearl 500/230-kV Transformer)

Justification/Project Description
This project adds a second 500/230-kV transformer at Pearl substation to provide reliable load service to the Portland area. Without this project, an outage of existing Pearl transformer will overload the McLoughlin 500/230-kV bank and/or the Mcloughlin-Pearl 230-kV line by 2004.

Limiting Outages Addressed
Pearl 500/230-kV transformer

Energization Date: **Fall 2003**
Estimated Cost: **$10 M**

11. Puget Sound Area Additions - Phase II (South Seattle 500/230-kV Transformer Support)

Justification/Description
This project consists of adding an additional 500/230-kV transformer in the South Seattle area to provide reliable load service. Without the project, an outage of the 500/230-kV transformers in the South Seattle area will overload the Covington 500/230-kV transformers.

Limiting Outages Addressed
Covington 500/230-kV transformers
Maple Valley 500/230-kV transformer
Tacoma 500/230-kV transformer

Energization Date: **Fall 2005**
Estimated Cost: **$20-25 M**

12. Olympic Peninsula Additions (Shelton 500/230-kV transformer and 500-kV line addition)

Justification/Description
This project relocates the Satsop 500/230-kV transformer to Shelton substation and constructs a new 20 mile, Olympia-Shelton 500-kV line. This project is needed to solve voltage stability problems on the Olympic Peninsula as well as mitigates breaker failures and other N-2 contingencies in the Olympia/Shelton area.

Limiting Outages Addressed
Olympia 500/230-kV transformer
Olympia 230-kV breaker failures
Olympia-Shelton 230-kV double line loss

Energization Date: Fall 2005
Estimated Cost: $25-30 M

13. I-5 Generation Additions (Paul-Troutdale 500-kV line)

Justification/Description
This project constructs a new, 105 mile Paul-Longview-Troutdale 500-kV line. It also includes a new 500/230-kV substation (3 breaker ring bus) in the Longview area. These additions are needed to reliably integrate several new generator additions along the I-5 corridor. This addition will increase the transfer capability on the I-5 corridor (South of Paul) by approximately 1100 MW.

Limiting Outages Addressed
Allston-Keeler 500-kV line
Keeler-Pearl 500-kV line
Trojan-Allston 230-kV double line loss
Paul-Allston 500-kV double line loss

Energization Date: Spring 2006
Estimated Cost: $150-155 M

14. North of John Day/Portland Area Reinforcement – Phase I (Loop the Hanford-Ostrander 500-kV line into Big Eddy)

Justification/Description
This project consists of constructing a new 20 mile, 500-kV line to loop the existing Hanford-Ostrander 500-kV line into Big Eddy substation. This project provides some reinforcement to the North of John Day constrained path as well as provides increased reliability of load service to the Portland Area during cold weather.

Limiting Outages Addressed
Big Eddy-Ostrander 500-kV line (winter)
Pearl 500-kV breaker failures (winter)
John Day-Big Eddy 500-kV double line loss (summer)
Ashe-Marion/Slatt-Buckley 500-kV double line loss (summer)
Slatt 500-kV breaker failures (summer)

Energization Date: Spring 2006
Estimated Cost: $45-50M

15. West of Noxon Reinforcement - Phase I (Libby-Bonners Ferry line rebuild)

Justification/Description
This project rebuilds the line between Libby and Bonners Ferry substations (60 miles of new 230-kV double circuit construction). The new line would be initially operated at 115-kV. This project is needed to relieve overload constraints during high Montana-PNW transfers. In addition, the project is being built double circuit to provide for future load service to North Idaho and provides the flexibility to extend the 230-kV line to Bell substation. (Also see project 20).

Limiting Outages Addressed
Taft-Dworshak 500-kV line
Taft-Bell 500-kV line
Libby-Noxon 230-kV line

Energization Date: Fall 2005
Estimated Cost: $50-55 M

Phase III - Infrastructure Additions:

16. Lower Monumental and McNary Area Generator Additions (McNary tap to Ashe- Marion 500-kV line)

Justification/Description
This project constructs a 30 mile, 500-kV line from McNary to a tap on the Ashe-Marion 500-kV line and terminal additions at Slatt and McNary substations. This project is needed to reliably integrate several generator additions in the McNary and/or Lower Monumental areas.

Limiting Outages Addressed
McNary-John Day 500-kV line
Coyote-Slatt 500-kV line

Energization Date: **Spring 2006**
Estimated Cost: **$45-50 M**

17. West of Spokane and Lewiston Reinforcements – Phase II (Little Goose-Starbucks 500-kV Line)

Justification/Description
This project constructs a new 15 mile, Little Goose-Starbucks 500-kV line and terminal facilities. Without this project a double line loss on the Little Goose-Lower Monumental corridor will limit the capability of the system to integrate or move energy West of Spokane and Lewiston.

Limiting Outages Addressed
Little Goose-Starbucks 500-kV double line loss
Coulee-Bell 500-kV line

Energization Date: **Fall 2006**
Estimated Cost: **$25-30 M**

18. Pacific Northwest-Idaho – Phase I (Hatwai-Lolo 230-kV line)

Justification/Description
This project constructs a second Hatwai-Lolo 230-kV line and terminal facilities. It also includes a reconductoring the McNary-Round-up 230-kV line (40 miles). This project is needed to increase the Pacific Northwest's transmission system's ability to import power from Montana and export power to Idaho simultaneously.

Limiting Outages Addressed
Midpoint-Summer Lake 500-kV line/Midpoint-Boise Bench 230-kV double line loss
Brownlee-Hells Canyon 230-kV line loss
Hatwai-Lolo 230-kV line
Hatwai-N Lewiston 230-kV line

Energization Date: **Spring 2005**
Estimated Cost: **$15-20 M**

19. Pacific Northwest-Idaho – Phase II (McNary-Brownlee 230-kV line)

Justification/Description
This project constructs a second 160-mile, McNary-Brownlee 230-kV line and terminal facilities (including series capacitors). This project is needed to increase the Pacific Northwest-Idaho constrained path transfer capability by 150-200 MW.

Limiting Outages Addressed
Midpoint-Summer Lake 500-kV line/Midpoint-Boise Bench 230-kV double line loss
Lolo-Oxbow/Brownlee-Hells Canyon 230-kV double line loss

Energization Date: Spring 2006
Estimated Cost: $110-115 M

20. West of Noxon Reinforcement - Phase II (Libby-Bell 230-kV line)

Justification/Description
This project constructs a new 230-kV line between the Sandpoint area and Bell substation (75 miles of new construction) to create a new Libby-Bell 230-kV line including terminal facilities. In addition, a new 230/115-kV transformer would be added at Sand Creek Substation. One side of the Libby-Bonners Ferry double circuit line (Project 15 above) would now be operated at 230-kV. This project is needed to reinforce the North Idaho load center, solve overload constraints during high Montana-PNW transfers and reduce the need for generator dropping at Libby.

Limiting Outages Addressed
Albeni Falls-Priest River 115-kV line section
Libby 230/115-kV transformer/Cabinet Gorge-Sand Creek 115-kV line
Libby-Noxon 230-kV line
Taft-Bell 500-kV line
Taft-Dworshak 500-kV line

Energization Date: Fall 2006
Estimated Cost: $55-60 M

* Cost estimates are very preliminary and include 34% overhead

[blank page]

Appendix J – Letters of Support - See Separate Letter File