VYBORG HVDC SCHEME

Geographic map

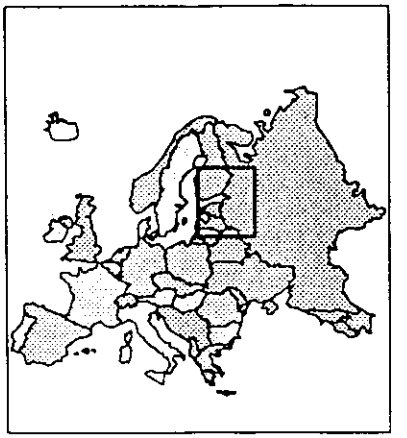

VYBORG.DRW

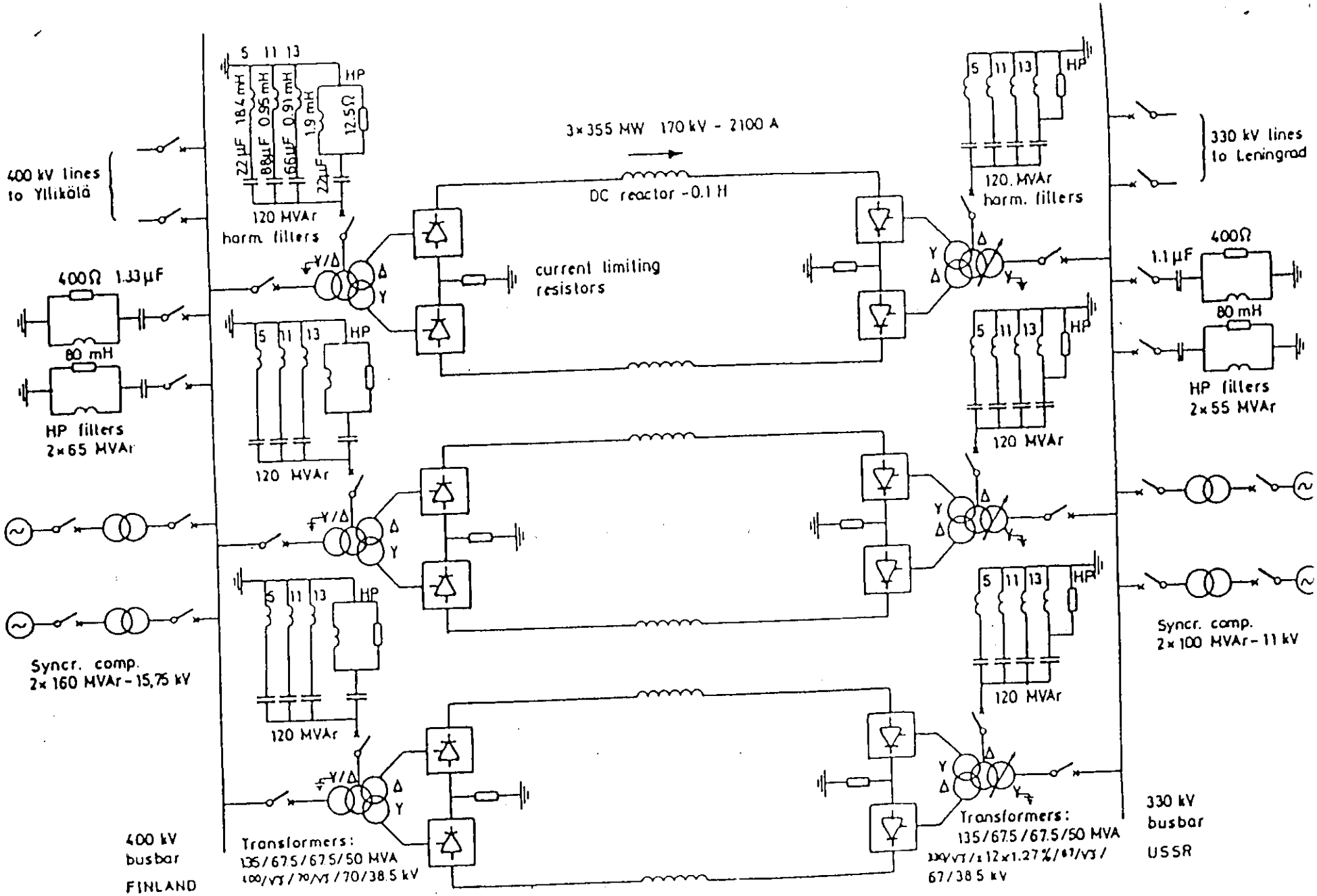

THE VYBORG HVDC SYSTEM
Simplified single line diagram