VANCOUVER ISLAND HVDC SCHEME

Geographic map

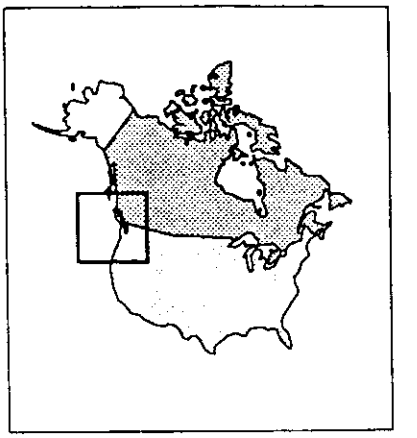

VANCOU.DRW

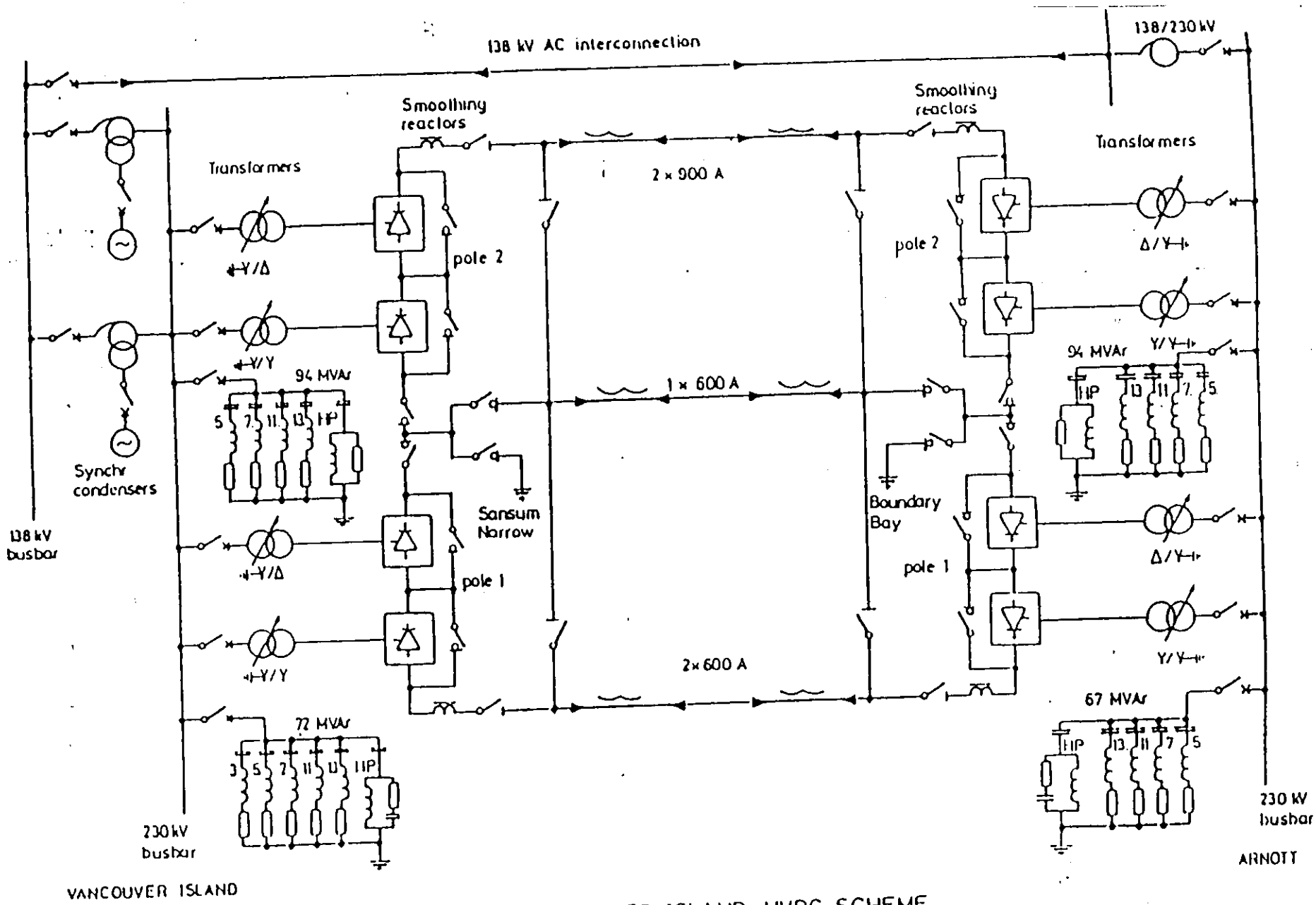

VANCOUVER ISLAND HVDC SCHEME
Simplified single line diagram