THE SHIN SHINANO HVDC SYSTEM

Geographic map

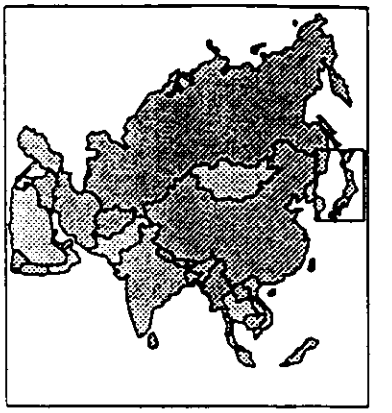

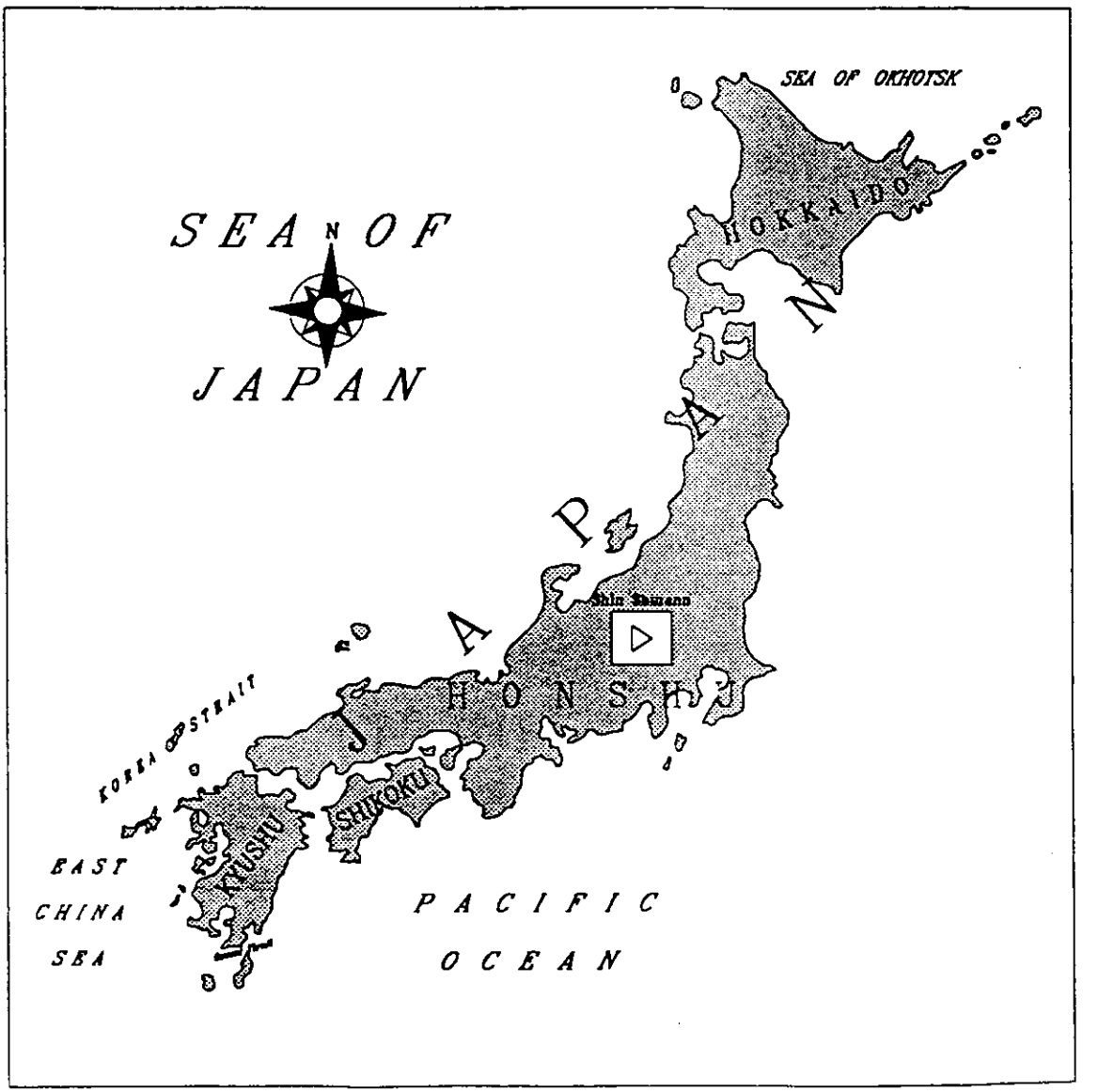

SHINSHIN.DRW

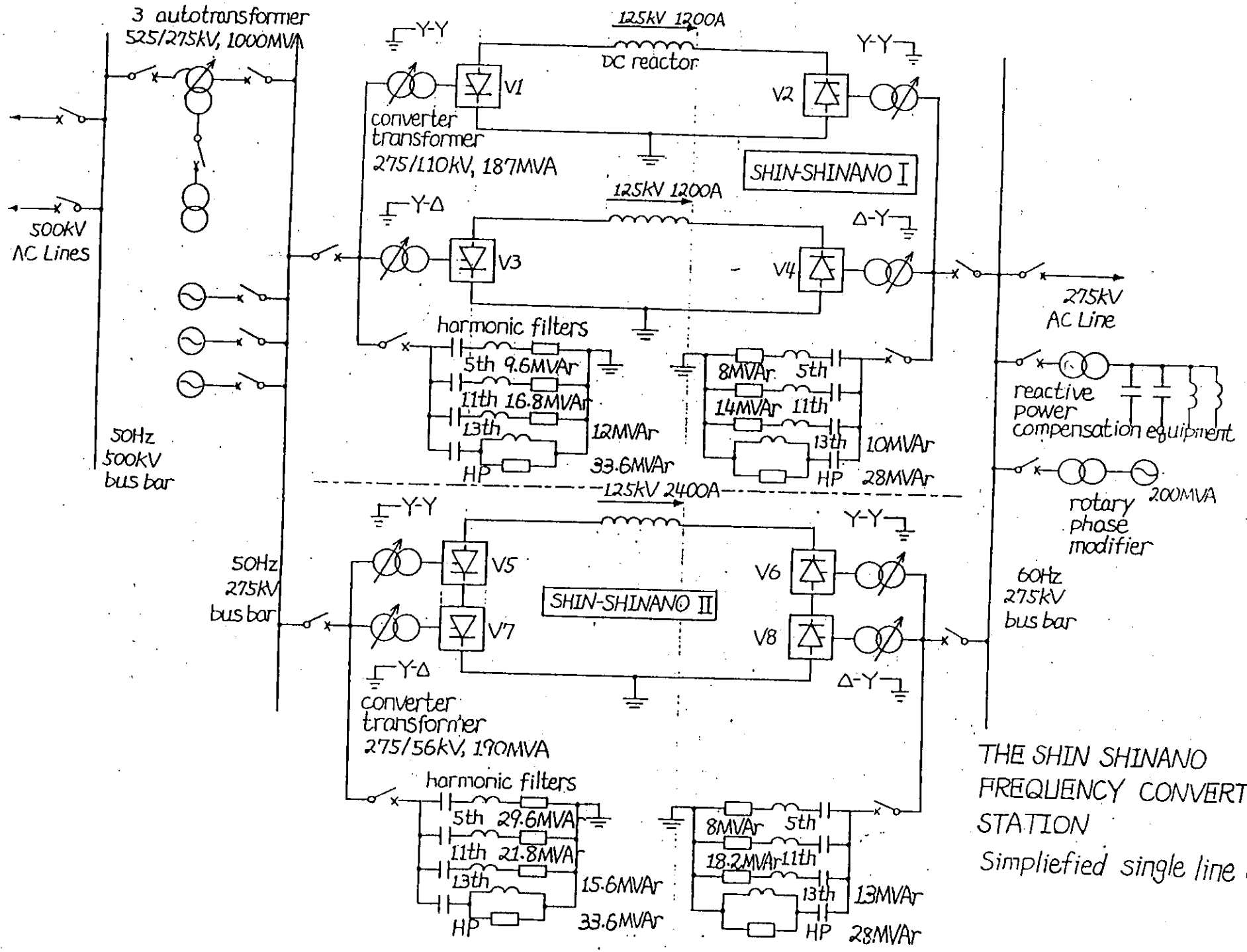

THE SHIN SHINANO FREQUENCY CONVERTER STATION

Simplified single line diagram