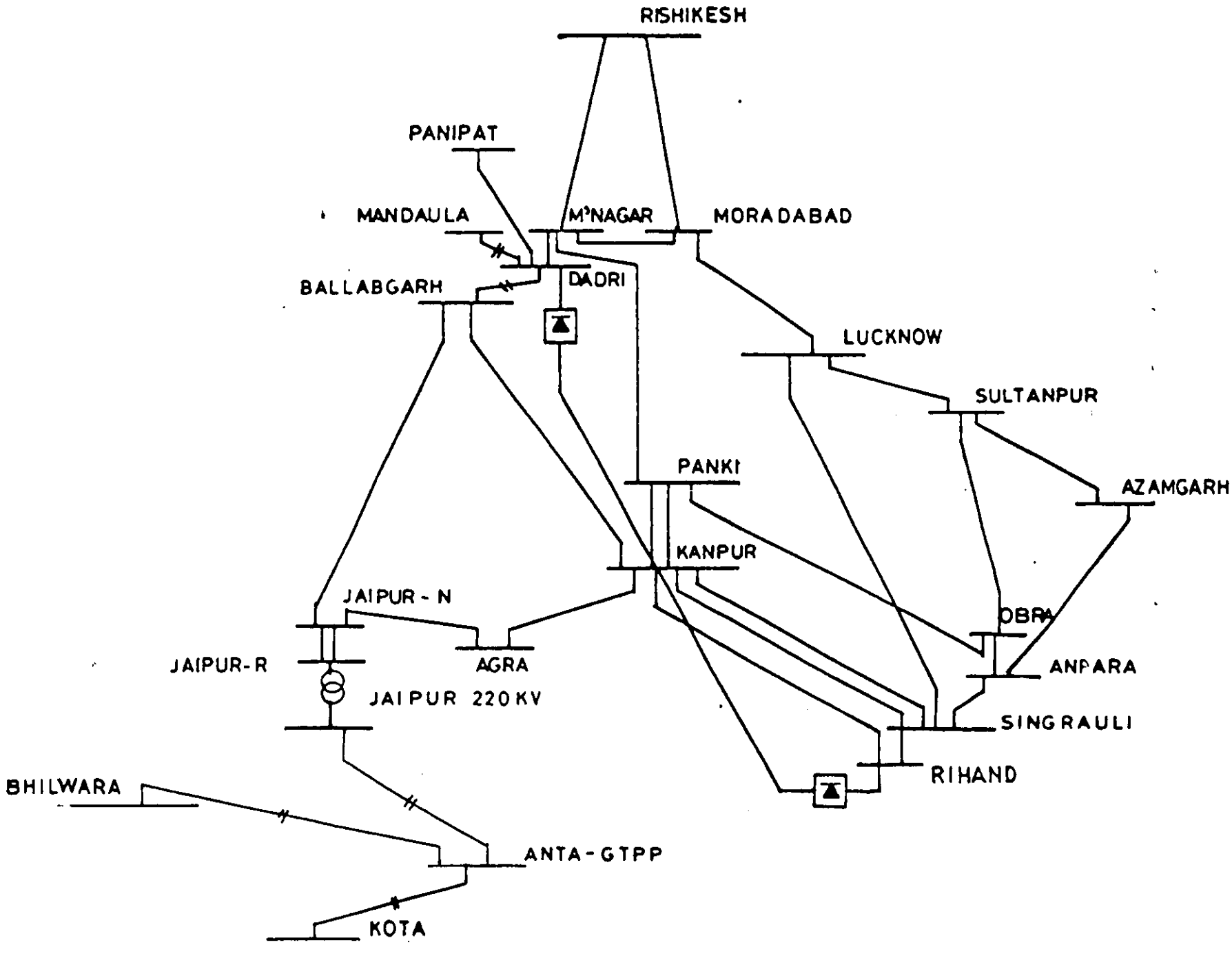

FIG. 2.0 - OUTLINE OF NORTHERN REGION GRID

RIHAND-DELHI HVDC SCHEME

Geographic map

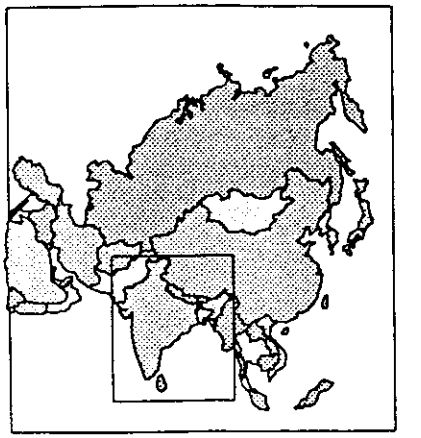

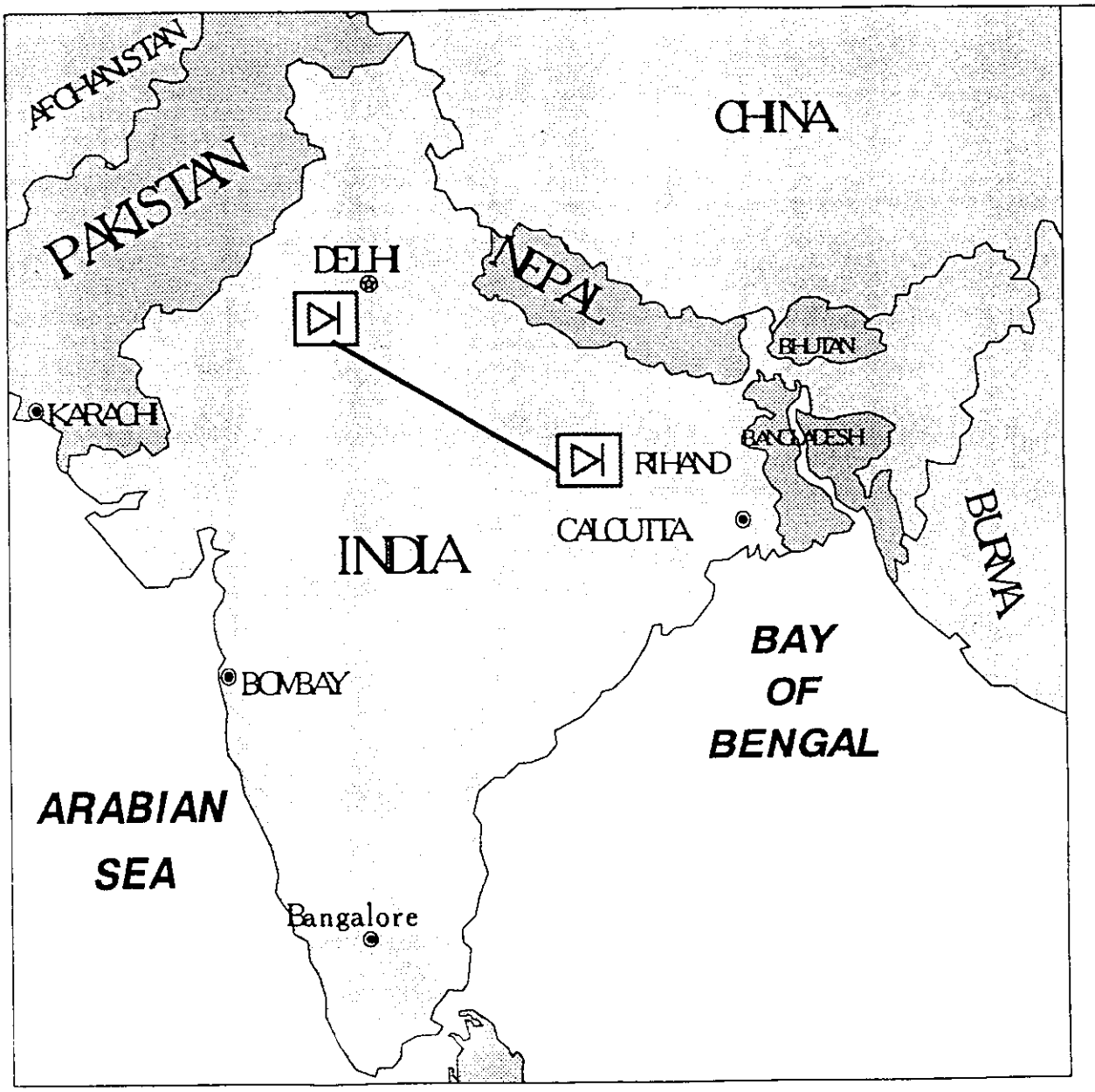

RIHAND.DRW

The Rihand-Delhi HVDC bipole transmission

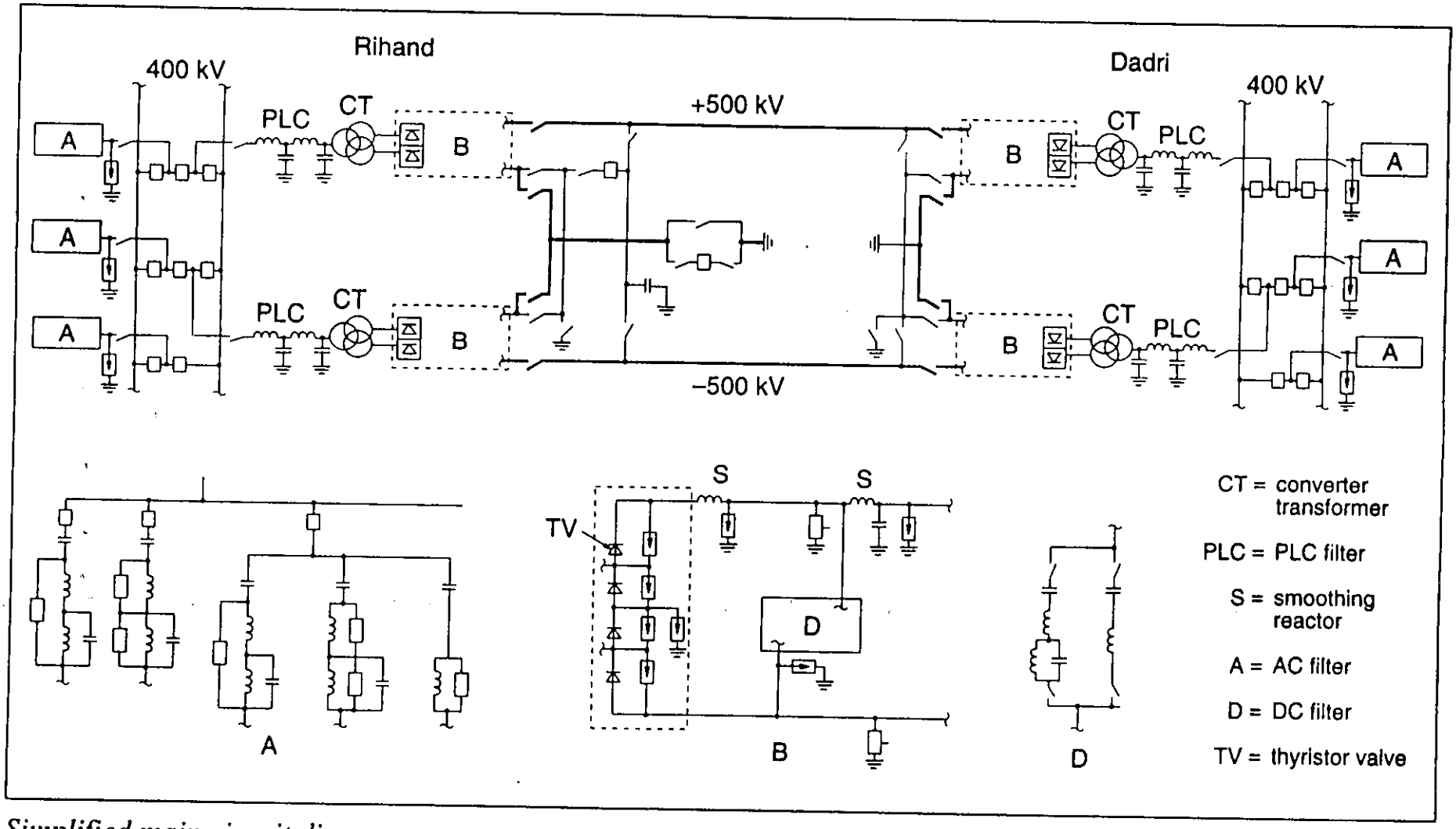

Simplified main circuit diagram