QUEBEC - NEW ENGLAND HVDC SYSTEM

Geographic map

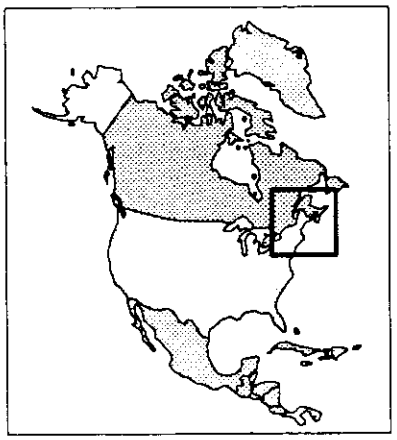

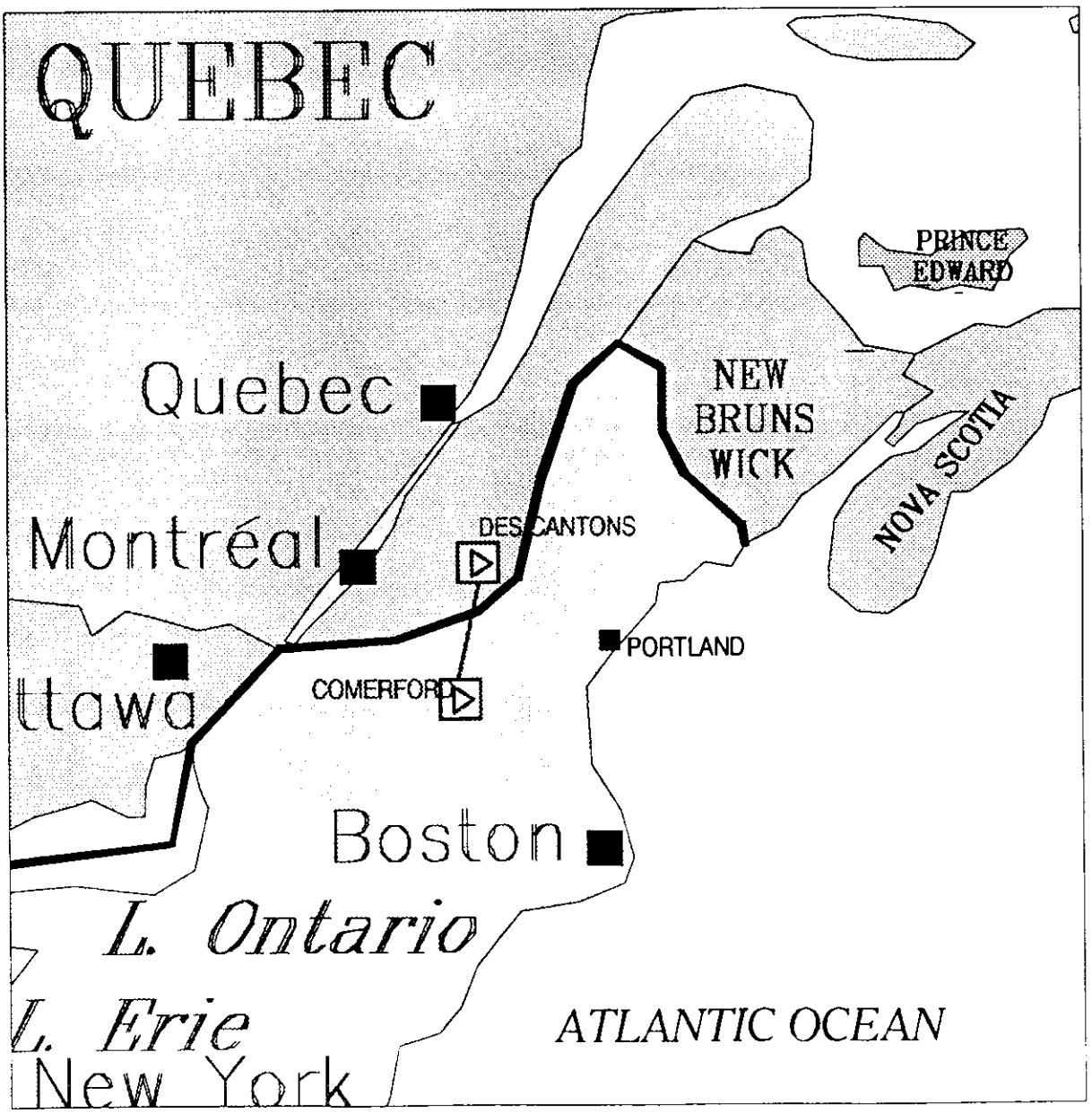

QUEBEC.DRW

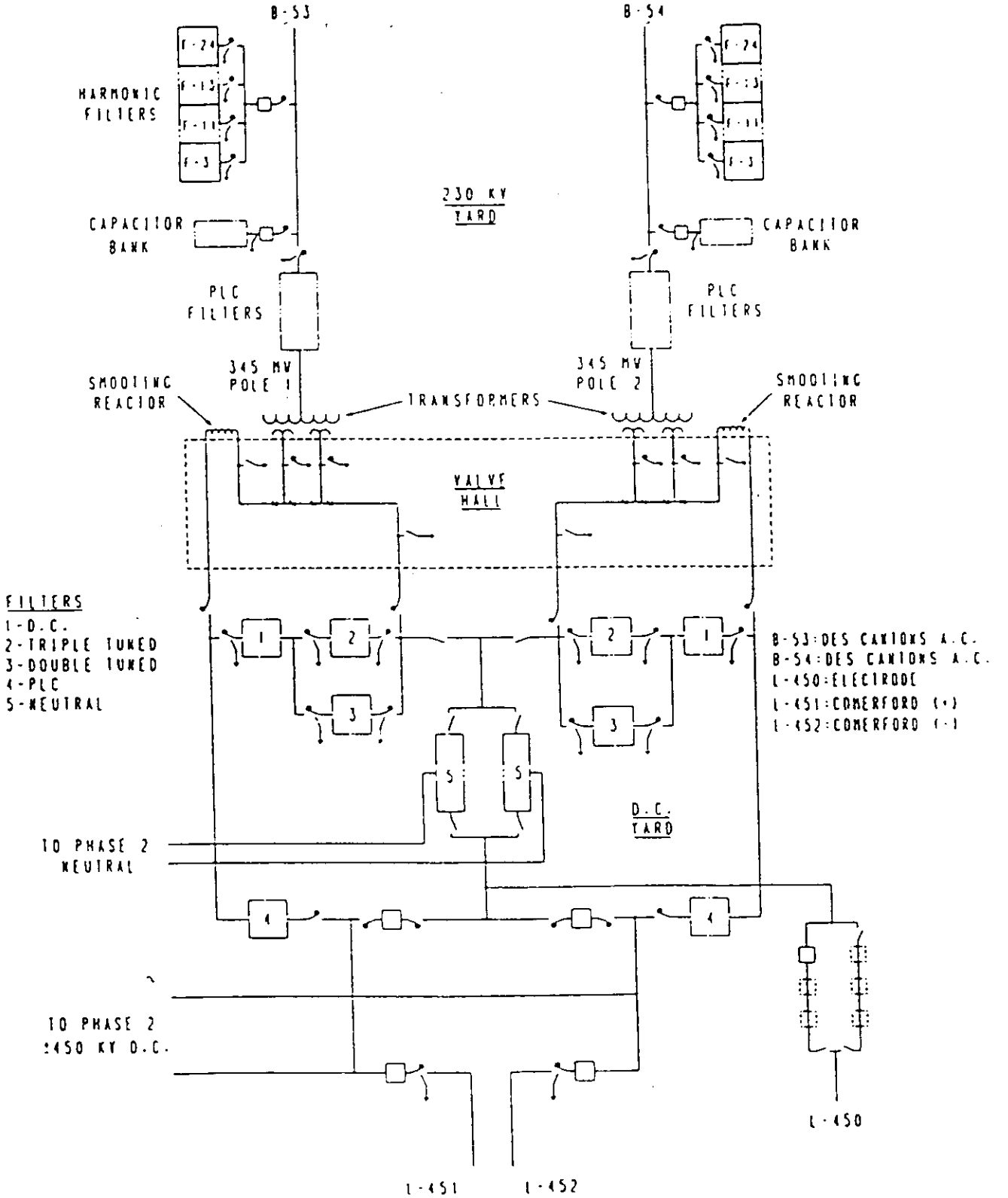

One line diagram

of the Des Cantons Converter

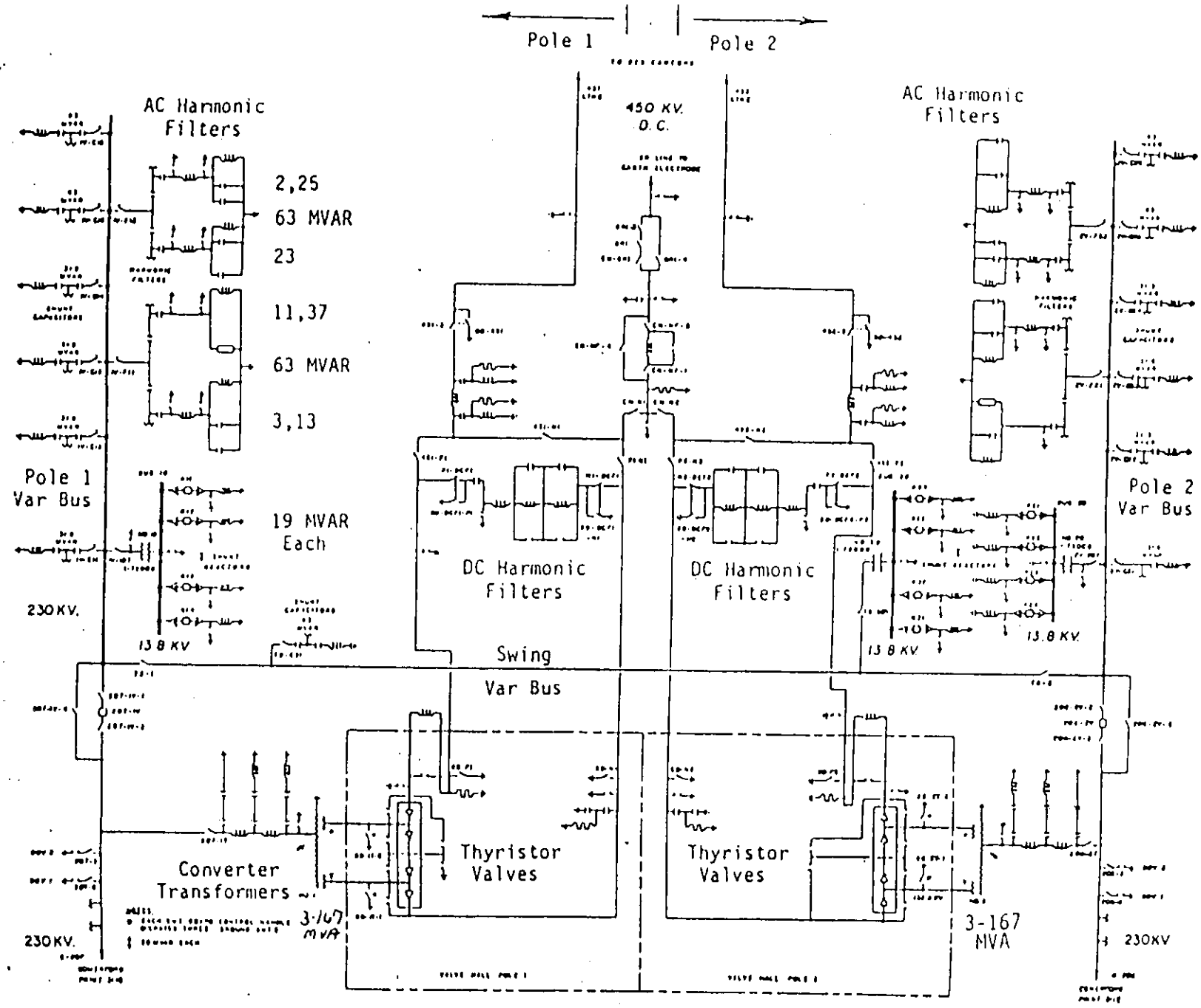

COMERFORD TERMINAL OF THE NEW ENGLAND TO QUEBEC HVDC INTERCONNECTION