THE PACIFIC INTERTIE HVDC SYSTEM

Geographic map

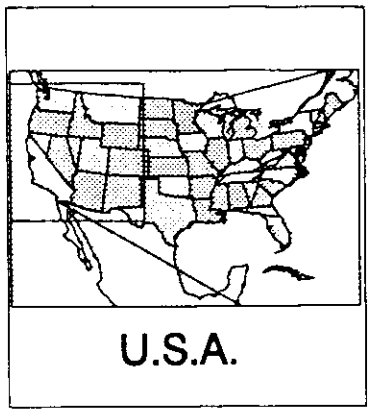

PACIFIC.DRW

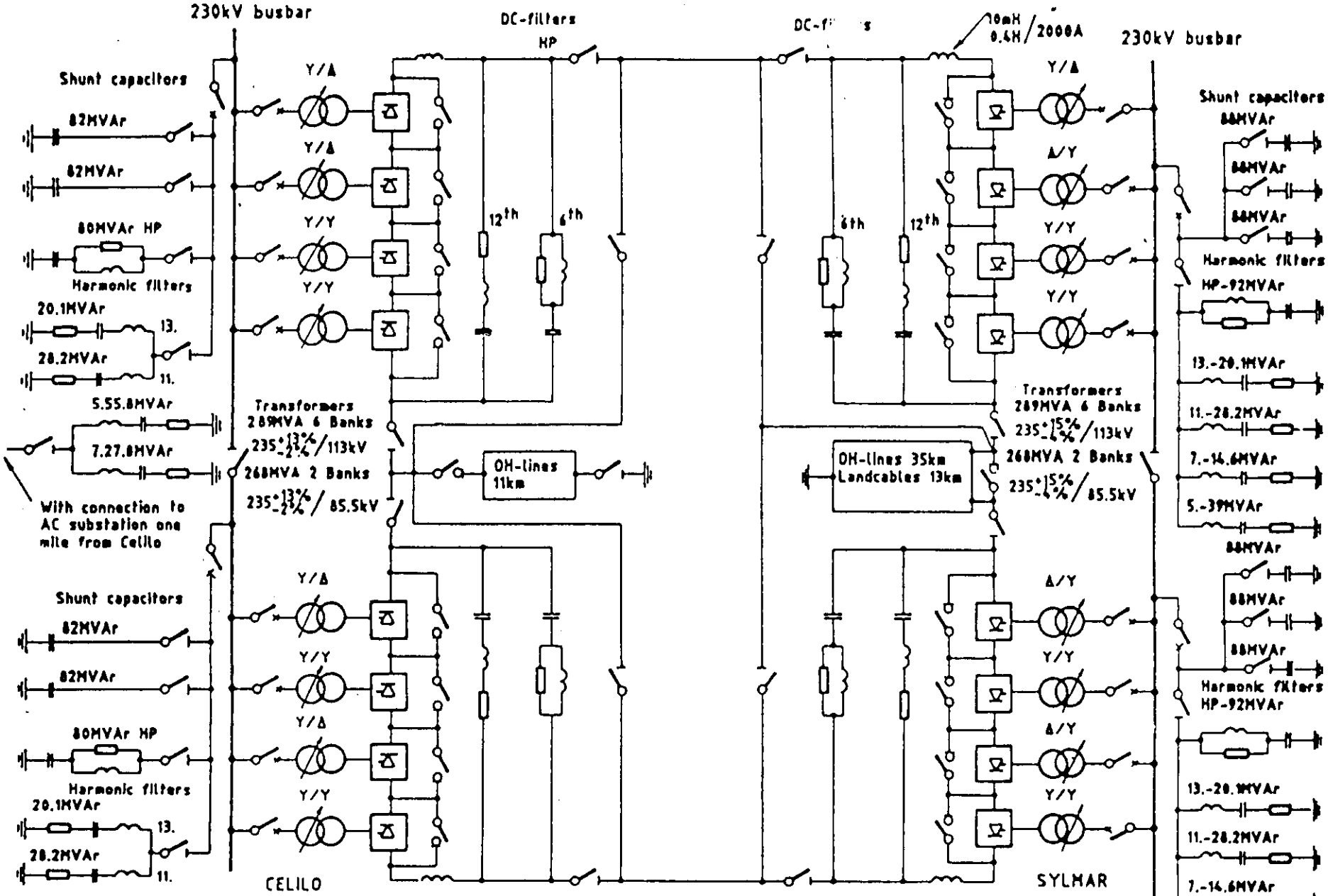

PACIFIC HVDC INTERTIE SHEME

Simplified single line diagram