THE NELSON RIVER HVDC SYSTEM

Geographic map

NELSON.DRW

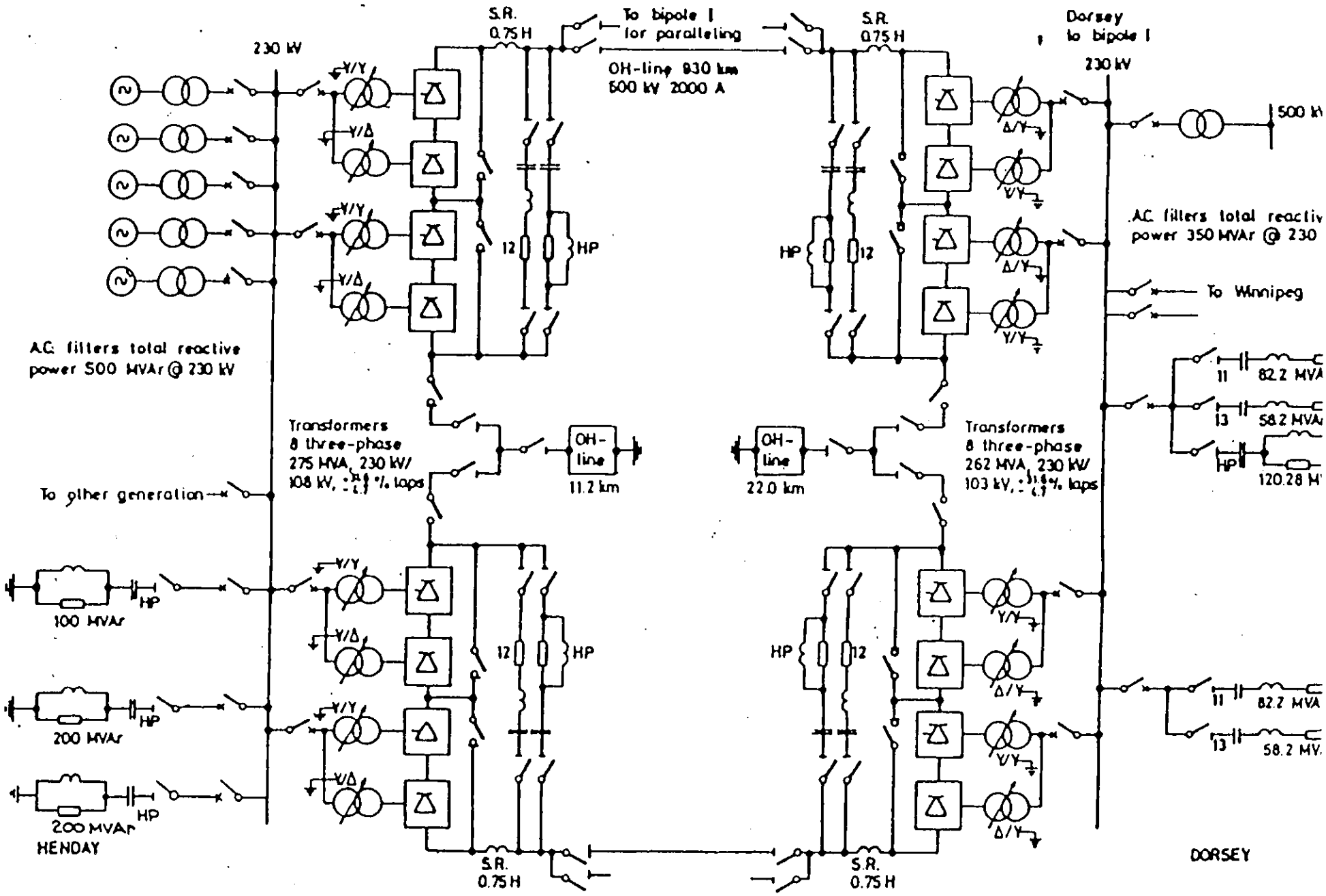

NELSON RIVER BIPOLE II HVDC SCHEME
Simplified single line diagram