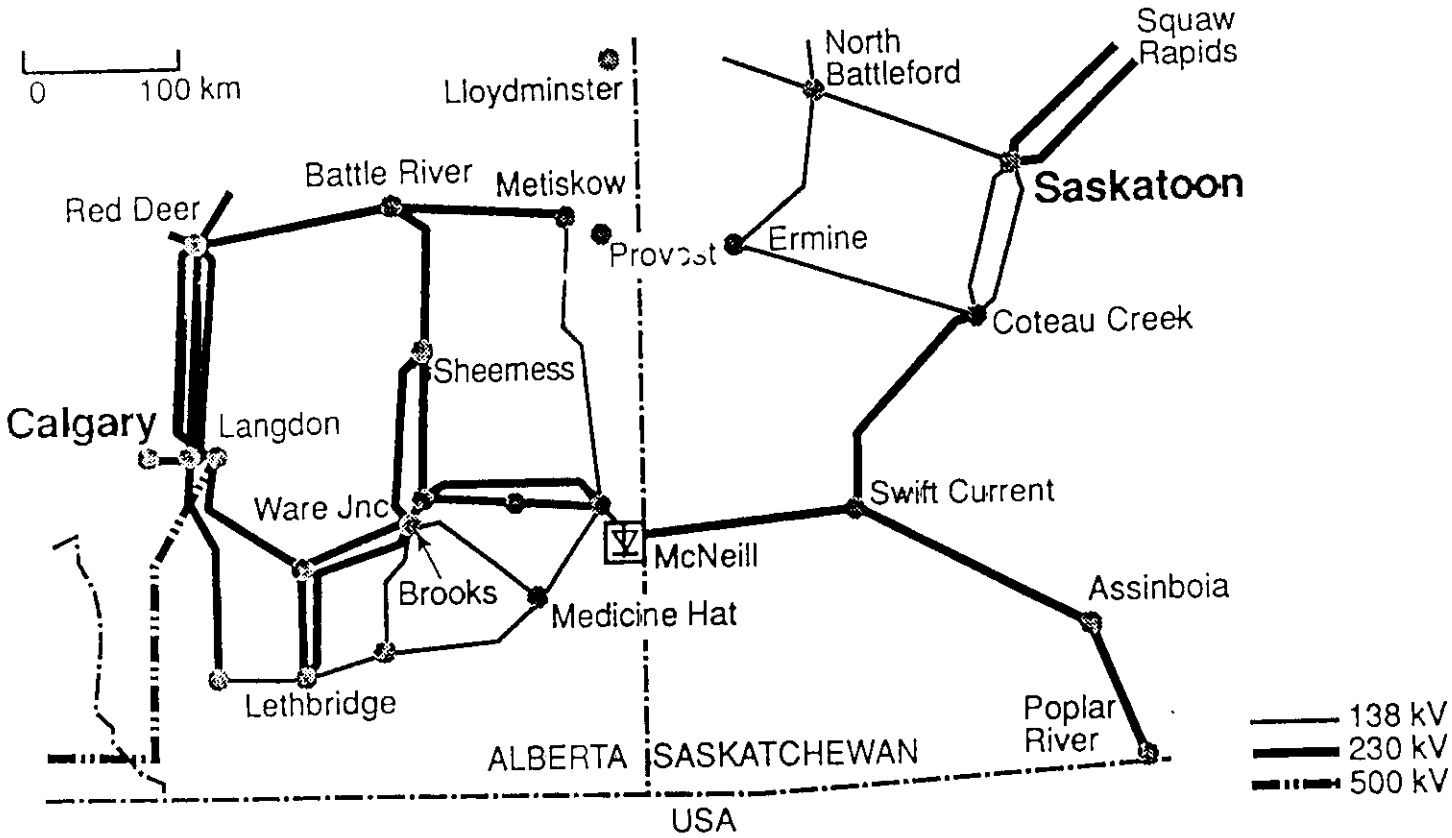

MC NEILL CANADA - HVDC SCHEME

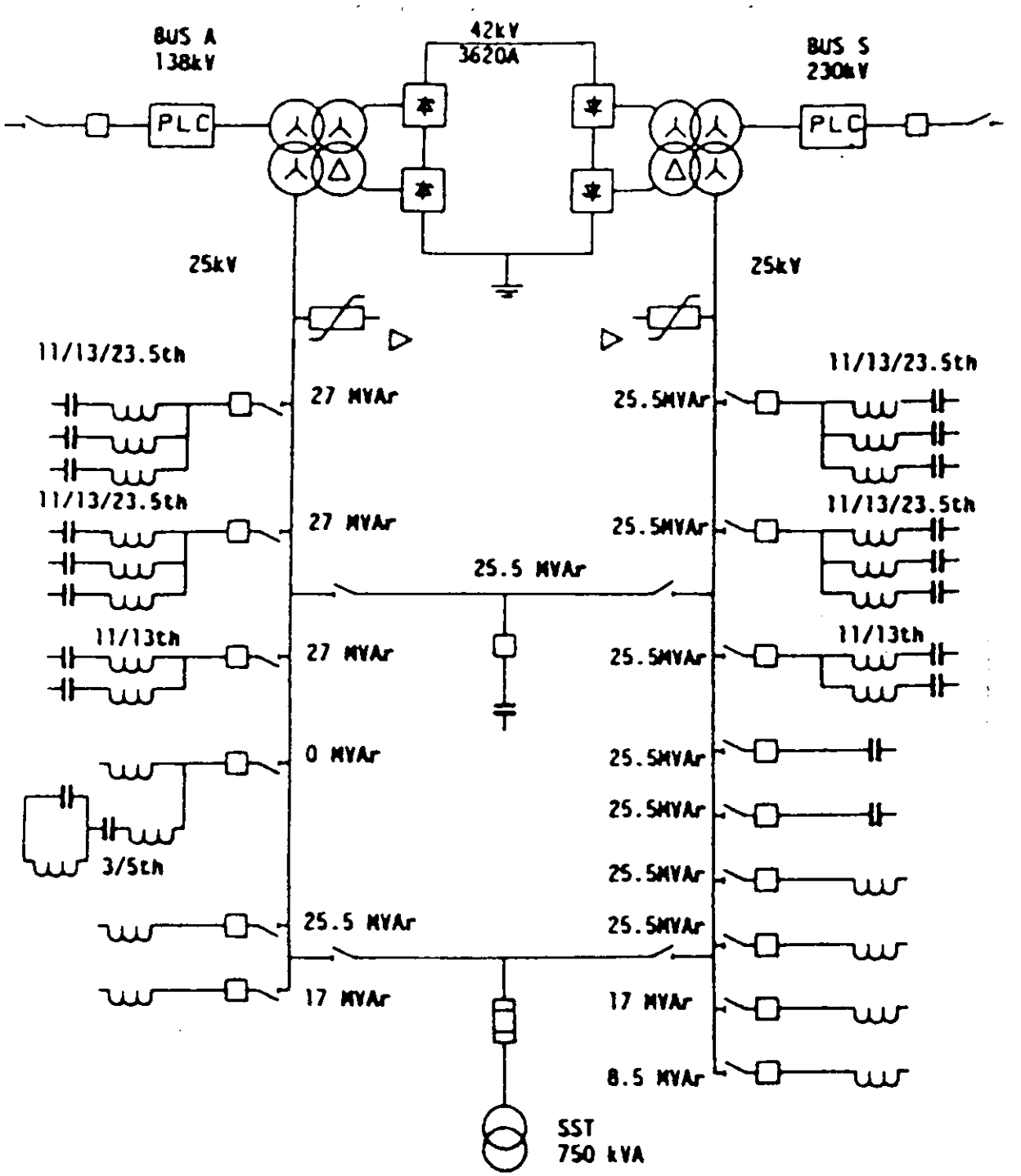

Figure 1 Single line diagram McNEILL Converter station