THE INTERMOUNTAIN POWER PROJECT

Geographic map

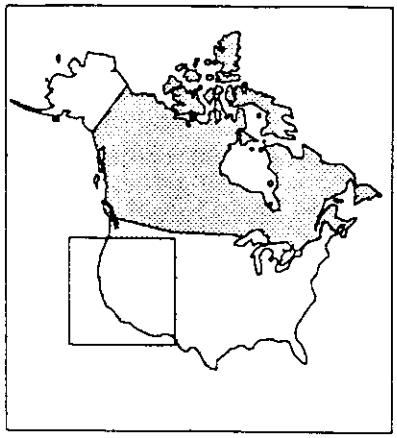

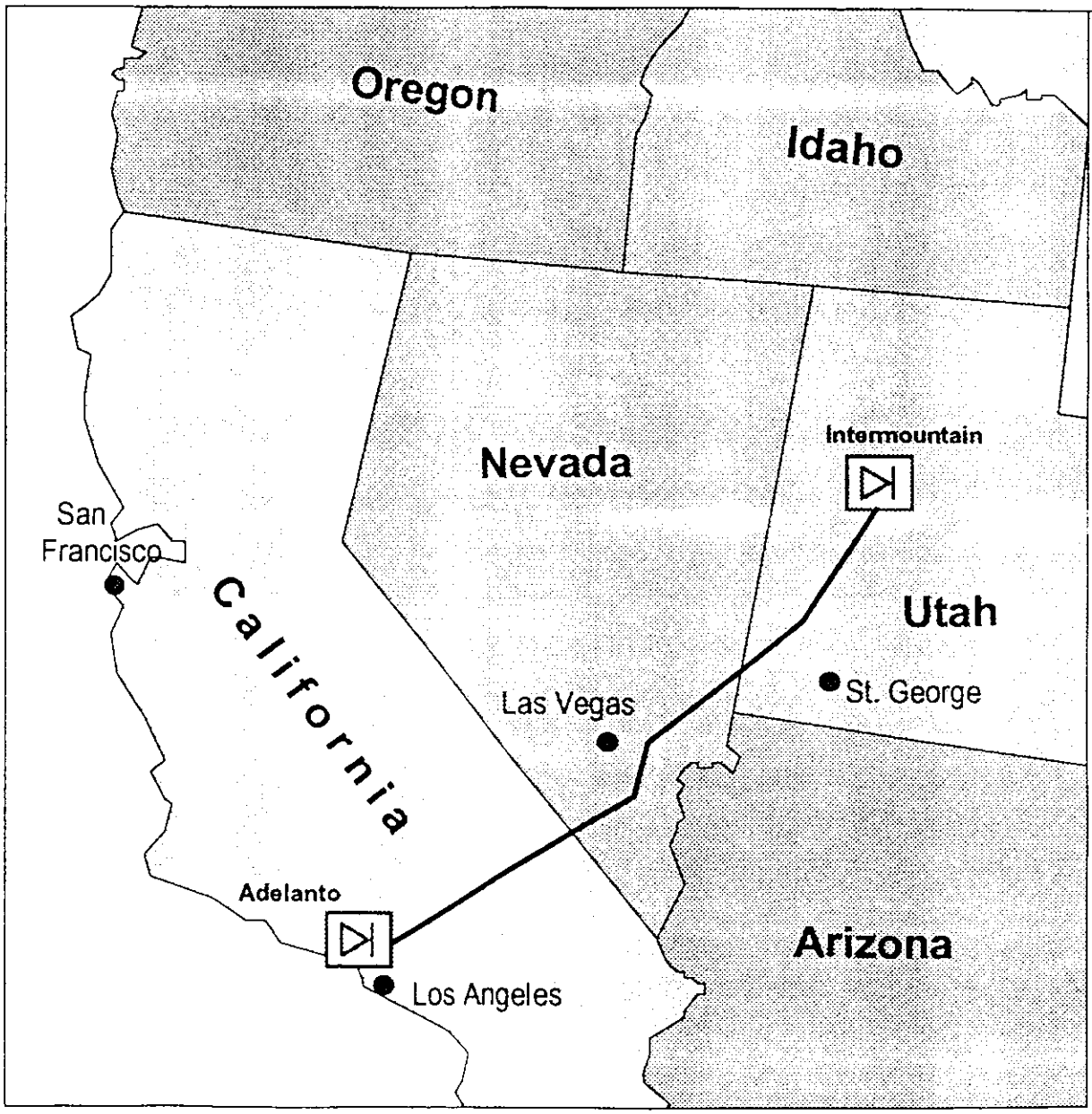

IPP.DRW

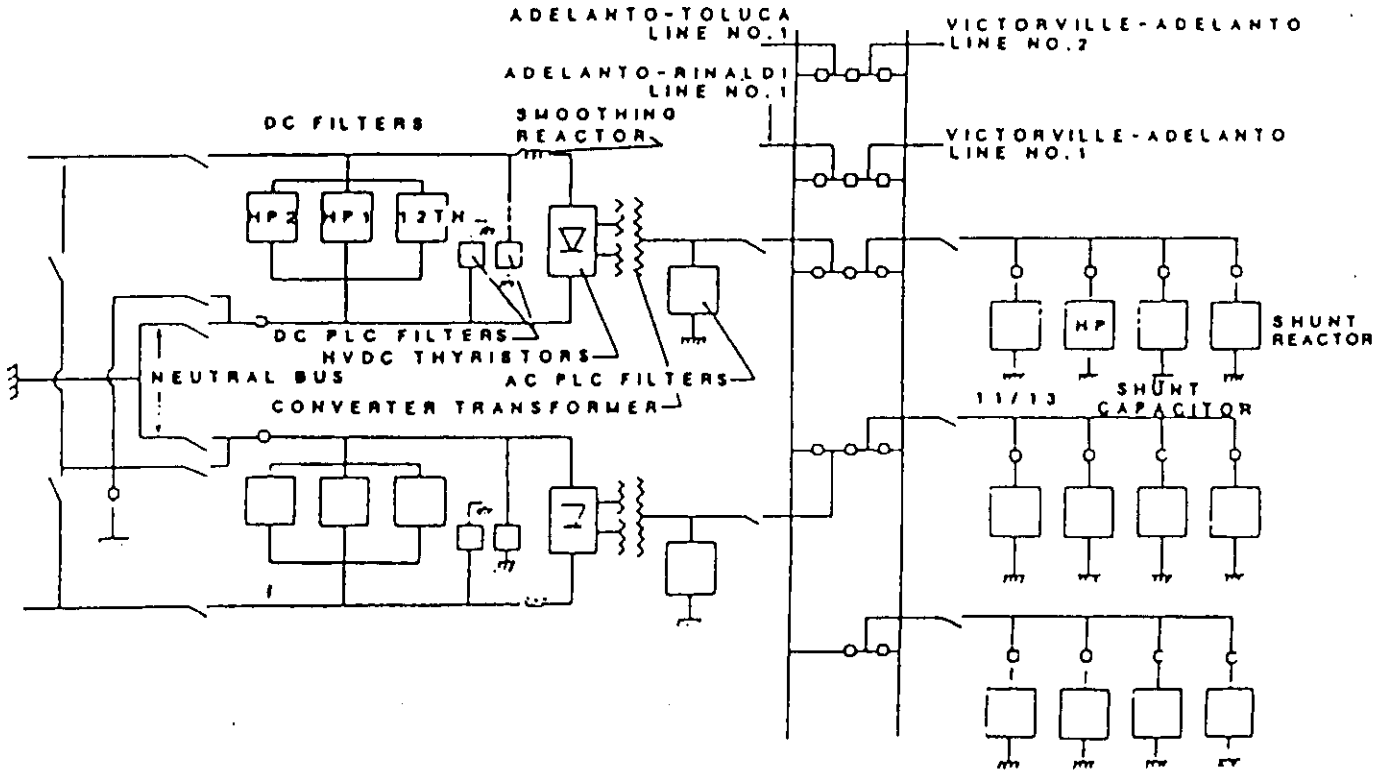

Adelanton Converter Station
One line diagram