THE HAENAM-CHEJU HVDC SCHEME

Geographic map

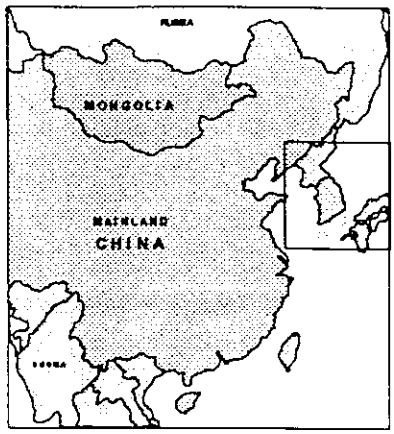

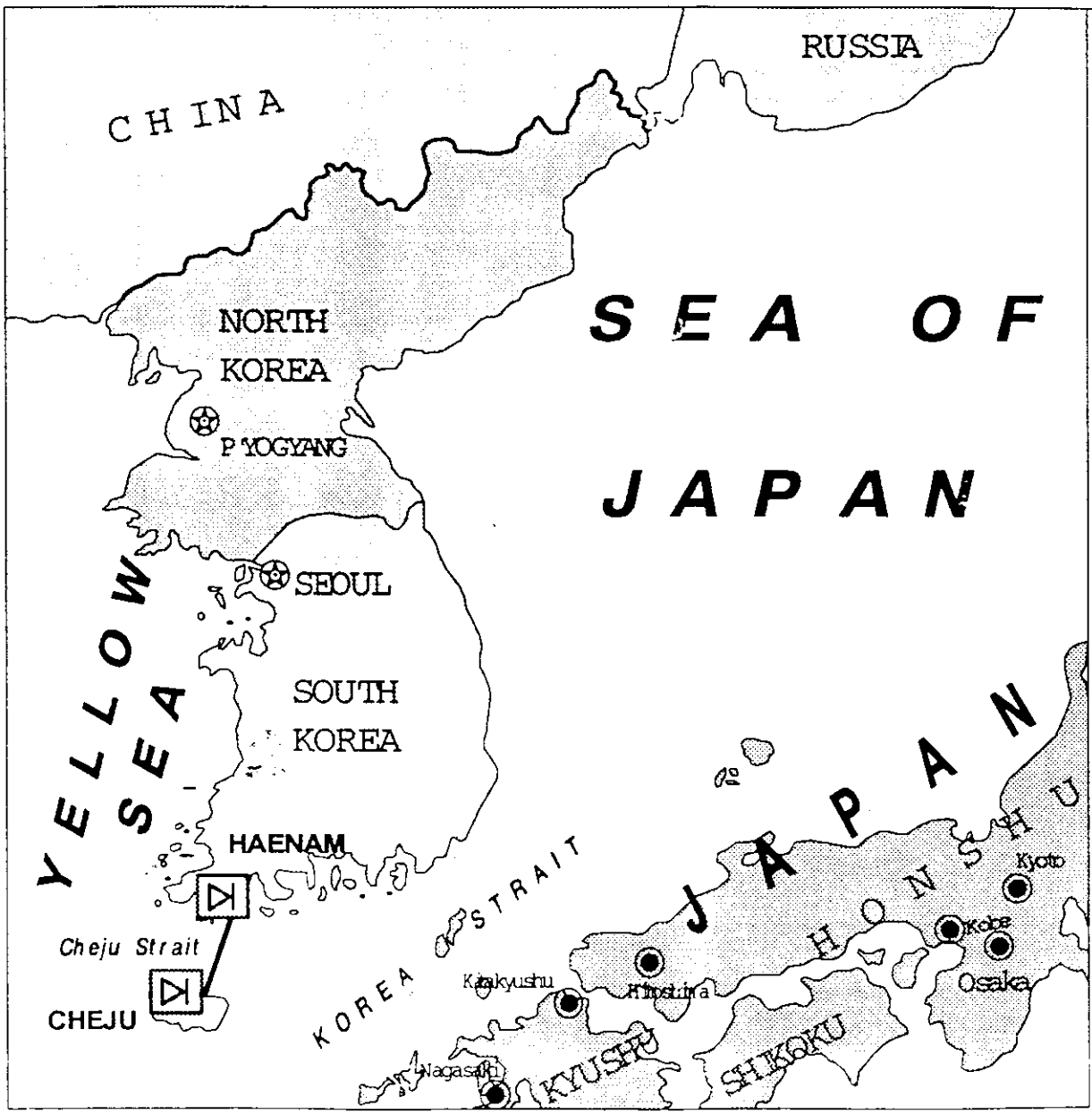

HAENAM.DRW

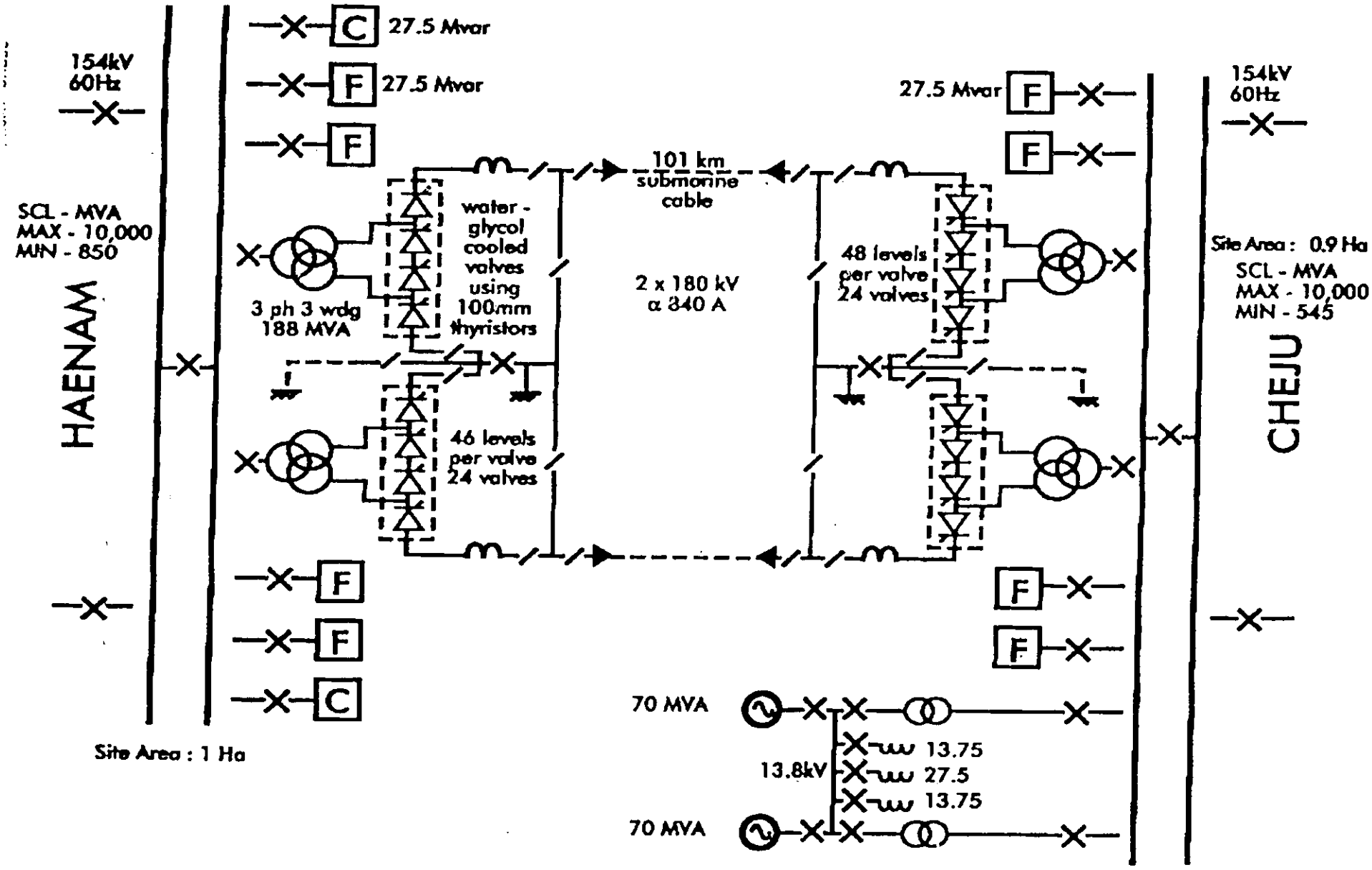
154kV
60Hz
SCL - MVA
MAX - 10,000
MIN - 850
HAENAM
Site Area : 1 Ha
C
27.5 Mvar
F
27.5 Mvar
F
3 ph 3 wdg
188 MVA
water - glycol cooled valves using 100mm thyristors
46 levels per valve 24 valves
F
F
C
101 km submarine cable
2 x 180 kV
α 340 A
27.5 Mvar
F
F
48 levels per valve 24 valves
F
F
70 MVA
13.8kV
13.75
27.5
13.75
70 MVA
154kV
60Hz
Site Area : 0.9 Ha
SCL - MVA
MAX - 10,000
MIN - 545
CHEJU