THE EEL RIVER HVDC SYSTEM

Geographic map

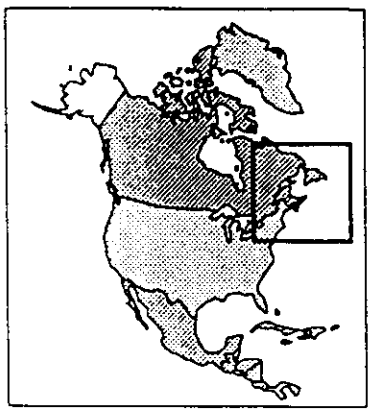

EELRIVER.DRW

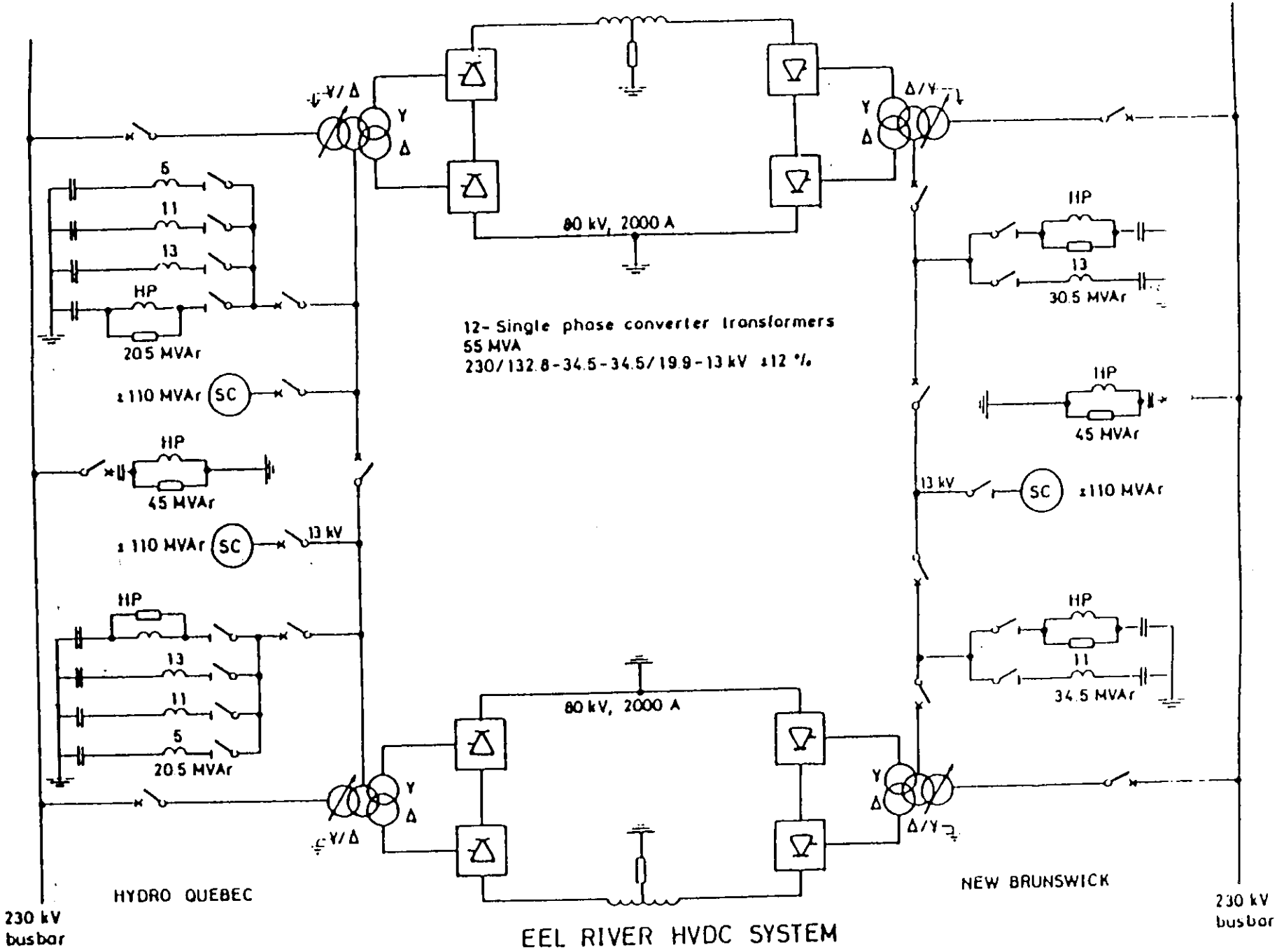

EEL RIVER HVDC SYSTEM
Simplified single line diagram

05/04