THE CU HVDC SYSTEM

Geographic map

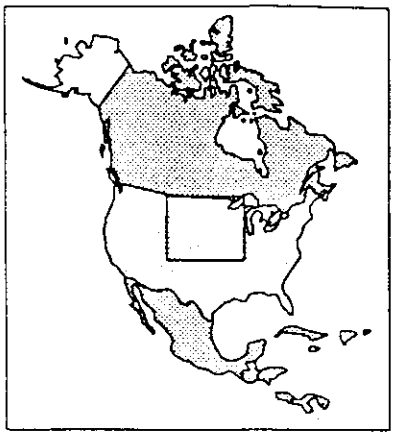

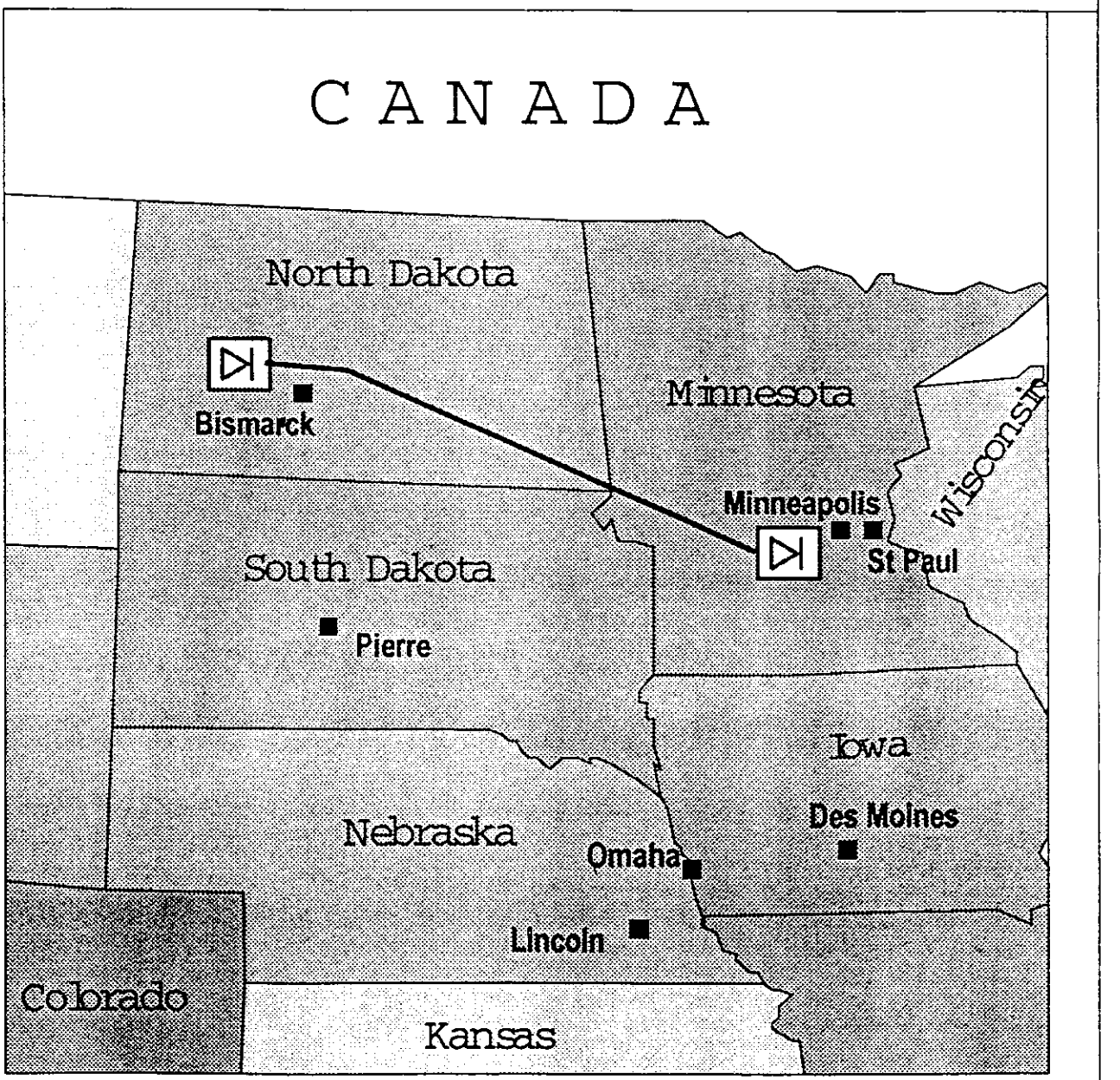

CU.DRW

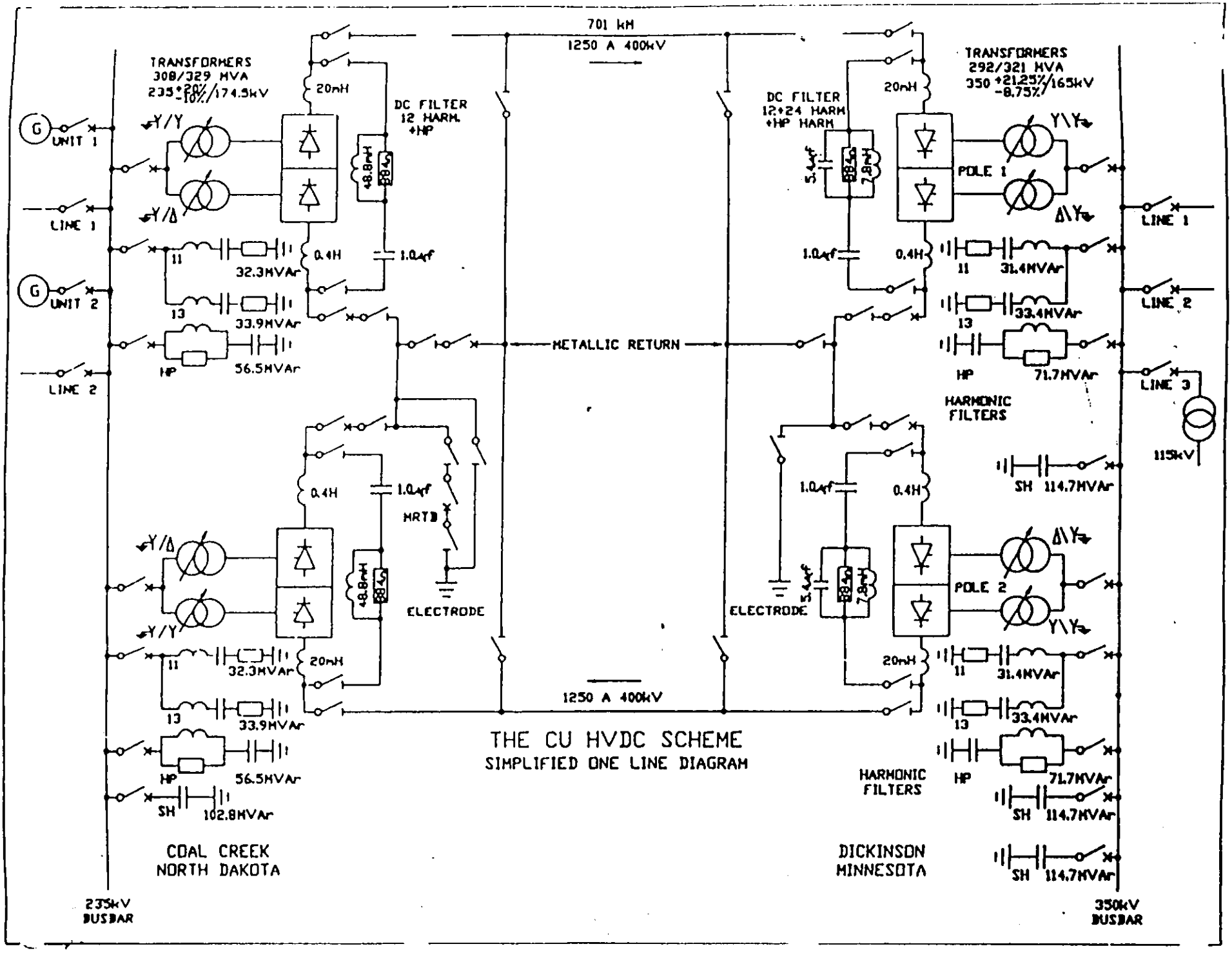
701 kM
1250 A 400kV
TRANSFORMERS
308/329 MVA
235 +20% -10%/174.5kV
20mH
DC FILTER
12 HARM
+HP
48.8mH
88Ω
Y/Y
Y/Δ
UNIT 1
LINE 1
UNIT 2
LINE 2
11
32.3MVAr
0.4H
1.0μf
13
33.9MVAr
HP
56.5MVAr
METALLIC RETURN
MRTB
ELECTRODE
1250 A 400kV
SH
102.8MVAr
THE CU HVDC SCHEME
SIMPLIFIED ONE LINE DIAGRAM
COAL CREEK
NORTH DAKOTA
235kV
BUSBAR
TRANSFORMERS
292/321 MVA
350 +21.25% -8.75%/165kV
DC FILTER
12+24 HARM
+HP HARM
5.4μf
7.8mH
POLE 1
POLE 2
Y\Y
Δ\Y
31.4MVAr
33.4MVAr
71.7MVAr
HARMONIC
FILTERS
LINE 3
115kV
114.7MVAr
DICKINSON
MINNESOTA
350kV
BUSBAR