THE CROSS CHANNEL HVDC SYSTEM

Geographic map

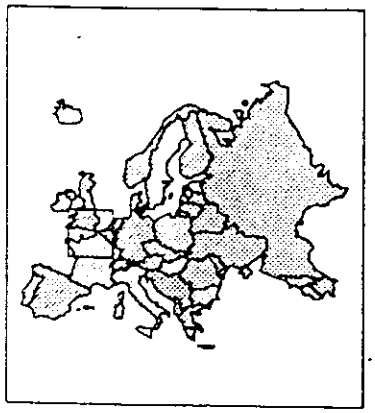

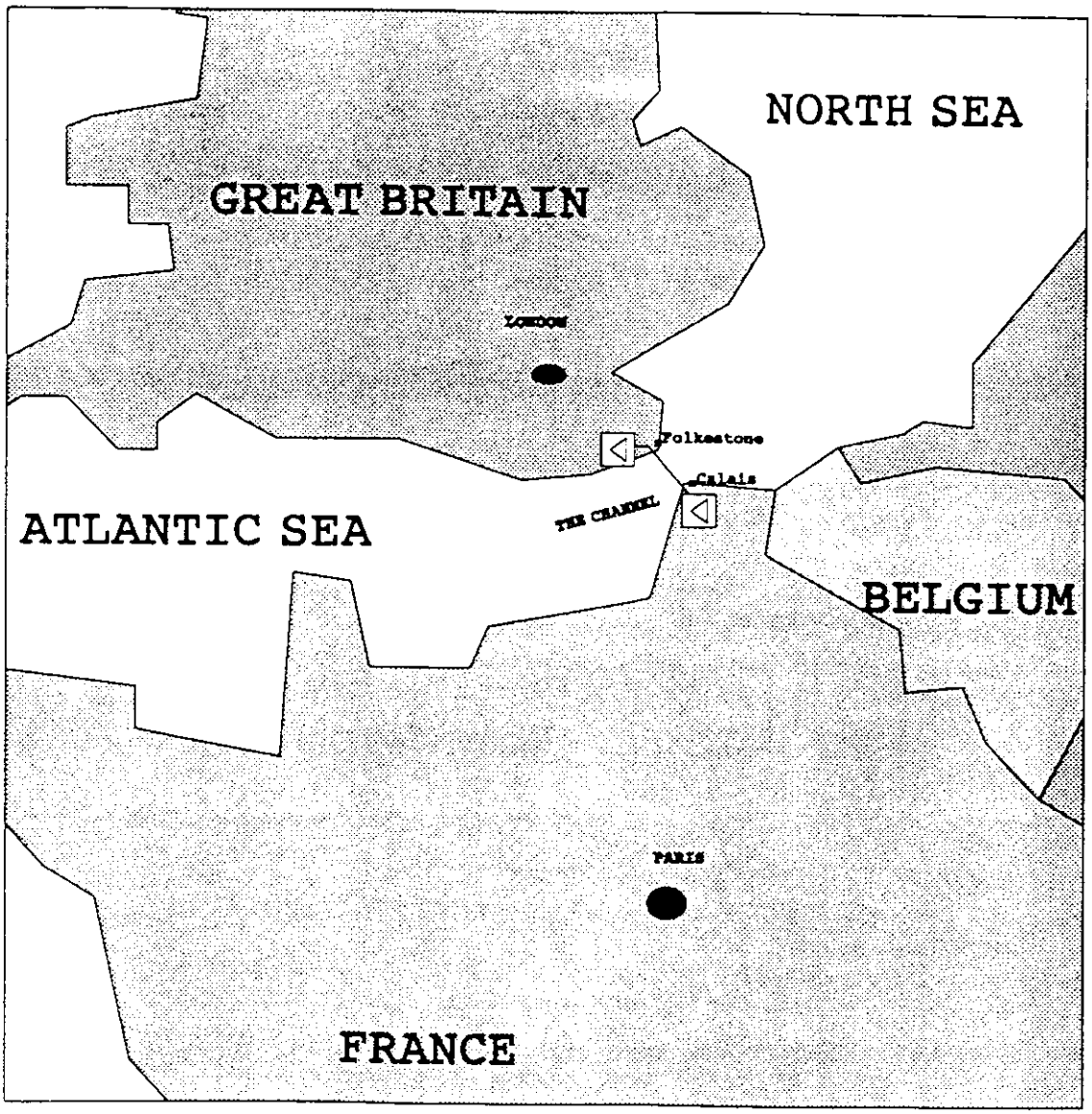

CROSS2.DRW

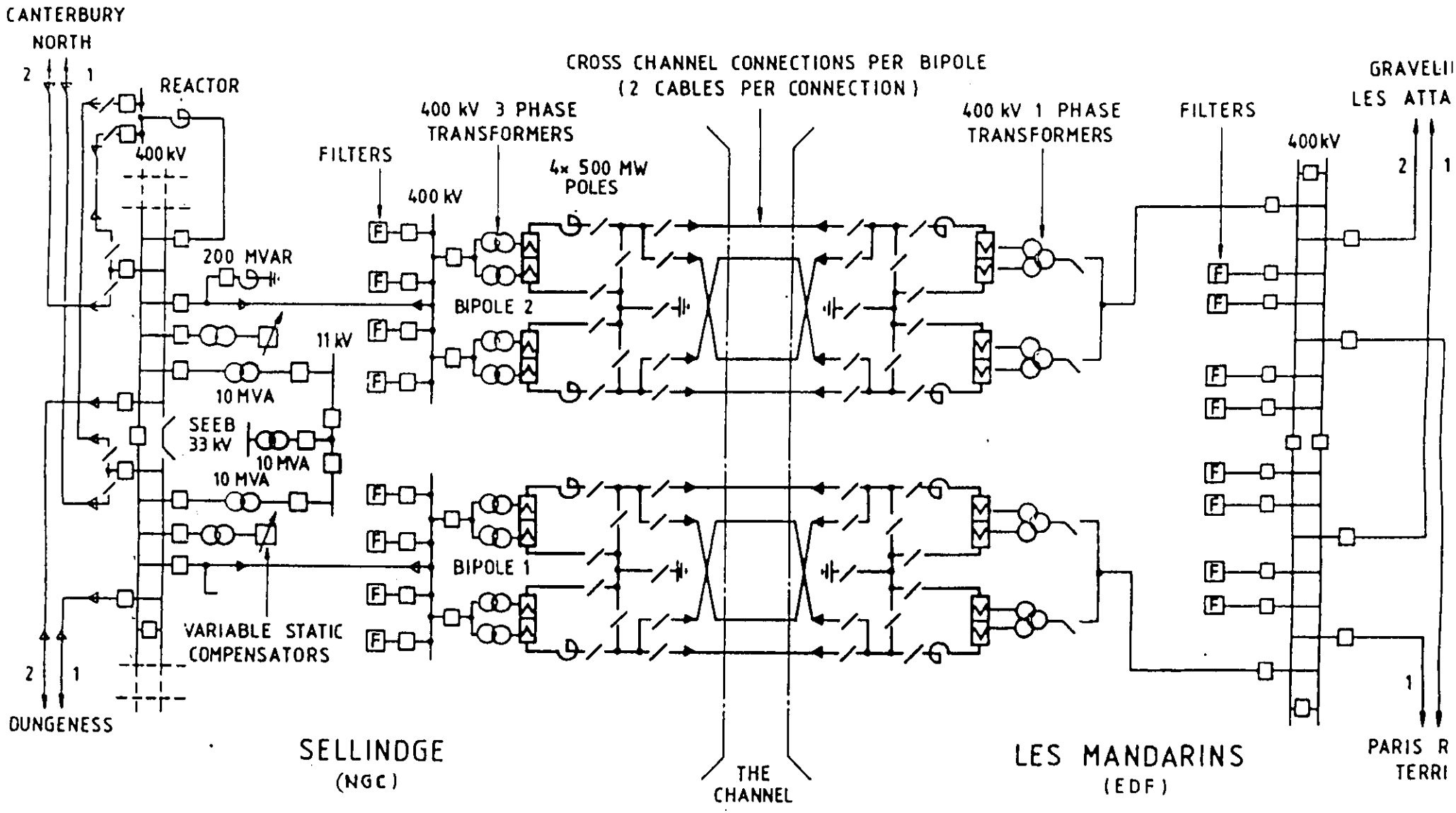

NGC - EDF 2 × 1000 MW HVDC TRANSMISSION LINK