THE CAHORA BASSA HVDC SYSTEM

Geographic map

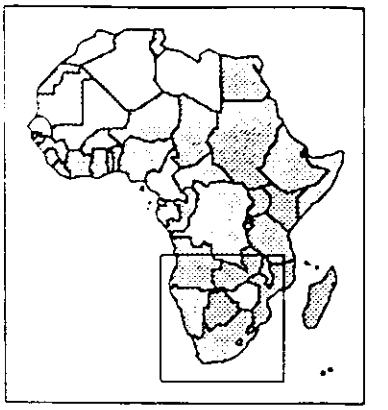

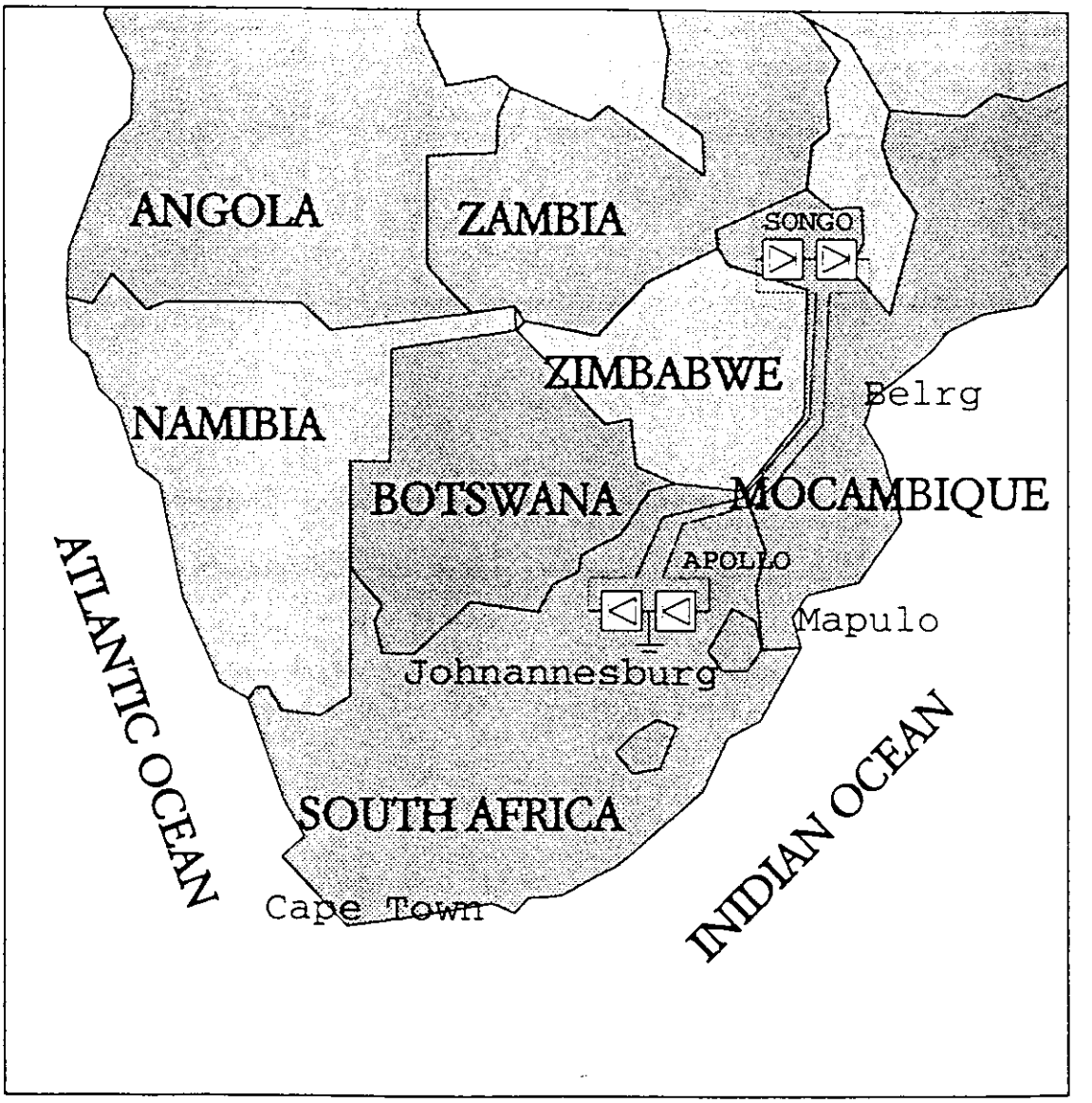

CAHORA.DRW

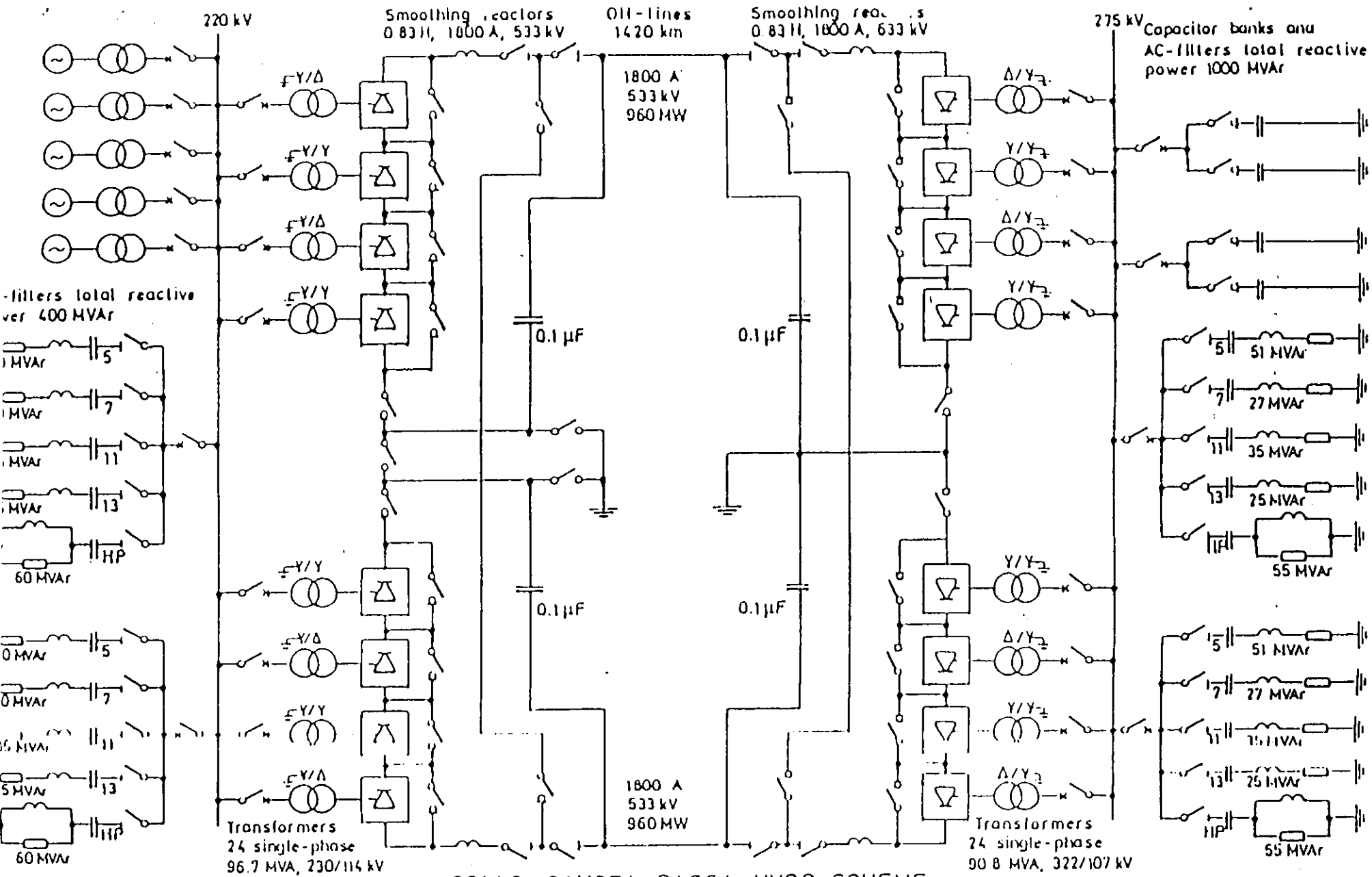

APOLLO CAHORA BASSA HVDC SCHEME
Simplified single line diagram