THE BLACKWATER HVDC SYSTEM

Geographic map

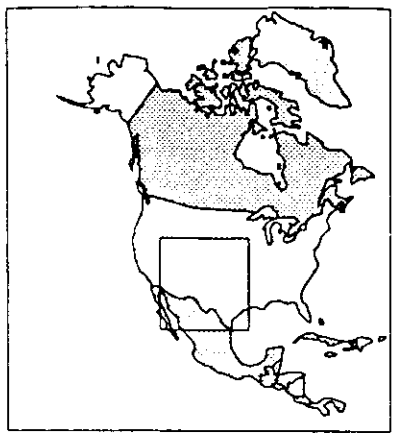

BLACKWAT.DRW

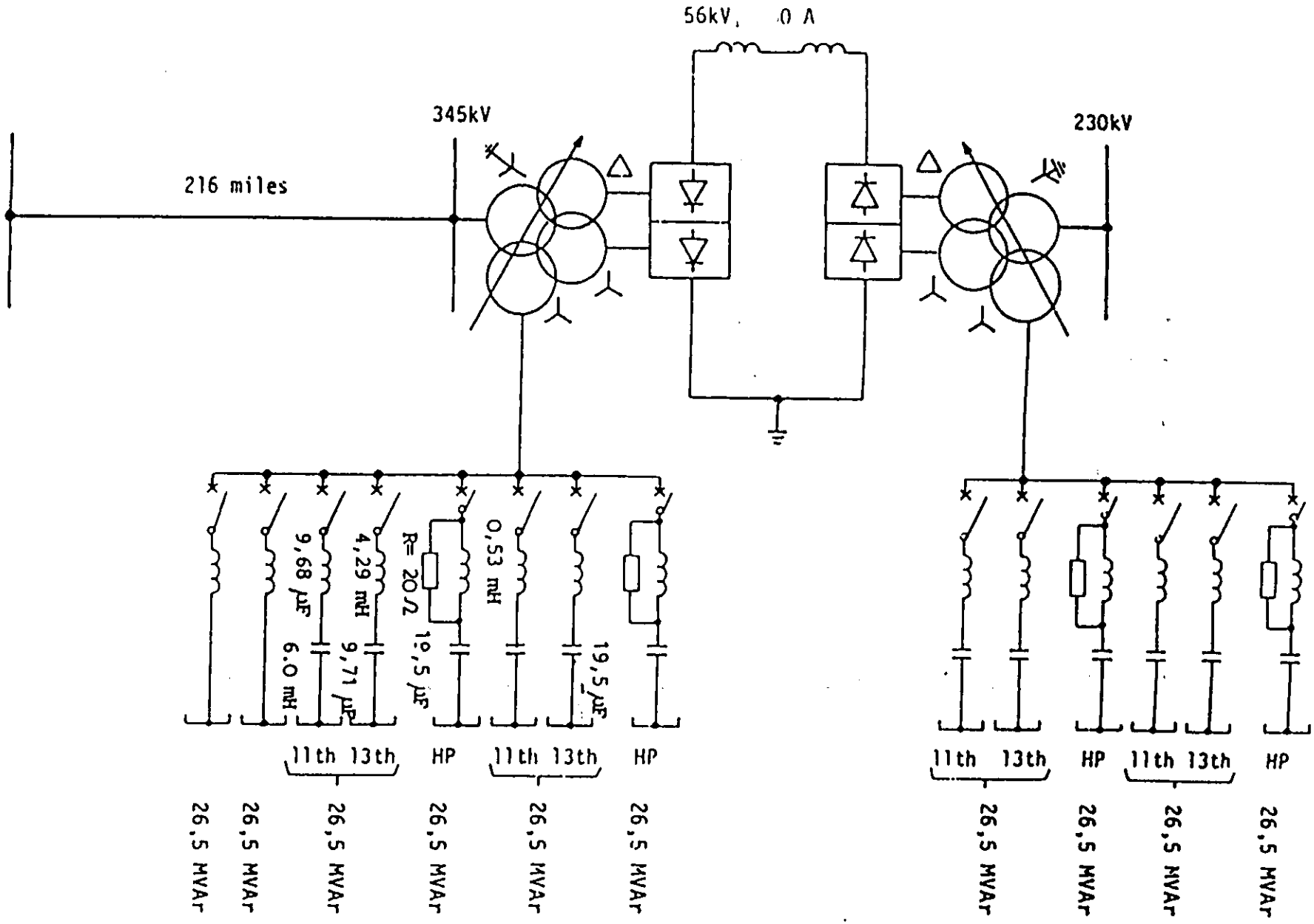

BLACKWATER HVDC SYSTEM

Simplified single line diagram